RENTAL CATALOG

Selection, Innovation, Performance

Your One-Stop Shop for Hydraulic Tools and Attachments

STANLEY Infrastructure

INDUSTRIAL TOOLS & ATTACHMENTS

PALADIN STANLEY LABOUNTY PENGO

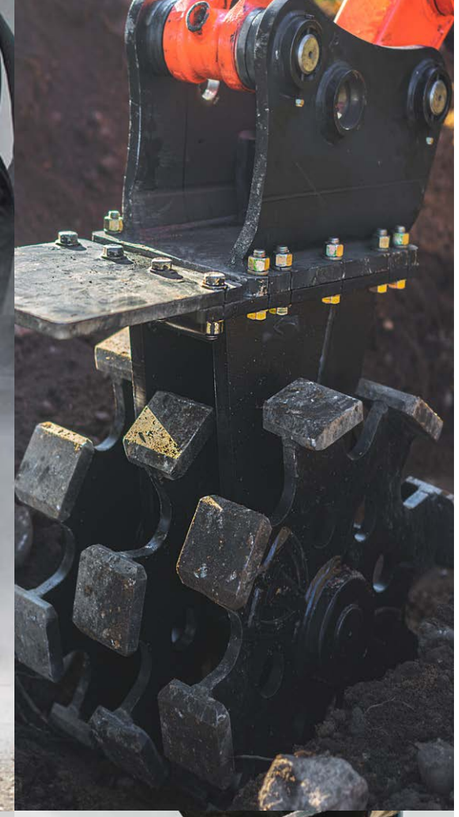

TABLE OF CONTENTS

Skid-Steer Attachments

Auger Drives 4
Auger Bits/Mounts/Extensions 5
Angle Brooms 6
Pick Up Sweepers 6
Buckets 7
Grapple Buckets 8
Multi-Purpose Bucket (4-in-1) 9
Autorake® 9
Landscape Rakes 10
Concrete Claw 10
Brush Cutters 11
Concrete Chuter 11
Dozer Blade 12
Stump Grinder 12
Trenchers 13
Cold Planers 13
Pallet Forks 14
Snow Blowers 14
Snow Push 15
Snow Buckets 15

Mini Skid-Steer Attachments

Auger Drives 16
Auger Bits 16
Buckets 17
Grapples 18
Landscape Rake 19
Pallet Forks 19
Stump Grinder 20
Tillers 20
Trenchers 21

Mini Excavator Attachments

Machine Classification 22
Quick Hitch Buckets 24
Quick Hitch Couplers 25
Main Pin Thumbs 25
MX Series Brush Cutter 26

Excavator Attachments

HD & Ditch Buckets 28

Wheel Loader/Backhoe Attachments

Machine Classification 30
General Purpose Bucket 32
Snow Push 32
Construction Forks 33
Loader Rake 33

StrikeForce™ Attachments

Small Mounted Breakers 34
Hydraulic Plate Compactors 35
Compaction Wheels 36
Drop Hammers 37

AUGER DRIVE UNITS

The **McMillen® Auger Drives** by Paladin, feature a wide variety of auger diameters, lengths and style for every digging application. Comes with various mounts available for most applications.

- 5 to 60 GPM available
- Extensions available for deeper digging
- Augers available up to 48” diameter
- Planetary reduction auger drives
- 2 speed auger drives available
- 1 to 2 year warranty, additional 1 year planetary warranty on select drives
- Fully welded flighting for added auger strength

PART #	DESCRIPTION
124808	X1975D (15-30GPM), HEX DRIVE ASSY, SKID STEER MOUNT, W/ HOSES
124807	X1975D (15-30GPM), 2.56” ROUND DRIVE ASSY, SKID STEER MOUNT, W/ HOSES
124806	X1475D (10-25GPM), HEX DRIVE ASSY, SKID STEER MOUNT, W/ HOSES
124805	X1475D (10-25GPM), 2.56” ROUND DRIVE ASSY, SKID STEER MOUNT, W/ HOSES
124810	X2475D (20-35 GPM) HEX DRIVE ASSY, SKID STEER MOUNT, W/ HOSES
124809	X2475D (20-35GPM), 2.56” ROUND DRIVE ASSY, SKID STEER MOUNT, W/ HOSES
124940	X1475D (10-25GPM) (MINI-EX MOUNT) HEX DRIVE ASSY, QH 027 MOUNT
124938	X1975D (15-30GPM) (MINI-EX MOUNT) HEX DRIVE ASSY, QH 027 MOUNT
124939	X1975D (15-30GPM) (MINI-EX / BACKHOE MOUNT) HEX DRIVE ASSY, QH 030 MOUNT
23435	AUGER MOUNT ONLY MINI EXCAVATOR 030 COUPLER
23362	AUGER MOUNT ONLY MINI EXCAVATOR 027 COUPLER
113026	AUGER MOUNT. ONLY SKID-STEER MOUNT

AUGER BITS / EXTENSIONS

HDC Bit

- Made for difficult ground conditions, compacted soils, heavy clay, asphalt, frozen ground, and fracturable rock
- HDC Augers feature heavy duty cast steel boring head, hardened drive-in gage (outside and wisdom (inside) teeth
- Equipped with hardened fishtail point and heavy-duty, double flighting

HDF Bit

- Made for light to moderate ground conditions
- HDF augers feature a fabricated boring head with hardened bolt-on gage (outside) and wisdom (inside) teeth, as well as a hardened fishtail point
- Equipped with heavy-duty double flighting

Rock Auger Bit

Made for solid, fracturable rock, frozen ground and compacted soils

- Feature bullet style teeth and a fabricated boring head, as well as heavy-duty single flighting
- Comes in 2” hexagon collar only and is available in 4’ length
- .75” thick bottom flight and a hardface outer edge

PART #	DESCRIPTION
20036	AUGER BIT, HEAVY DUTY 6”, 2” HEX, 4’ HDC
20113	AUGER BIT, HEAVY DUTY 9”, 2” HEX, 4’ HDC
20201	AUGER BIT, HEAVY DUTY 12”, 2” HEX, 4’ HDC
20321	AUGER BIT, HEAVY DUTY 18”, 2” HEX, 4’ HDC
20401	AUGER BIT, HEAVY DUTY 24”, 2” HEX, 4’ HDC
20441	AUGER BIT, HEAVY DUTY 30”, 2” HEX, 4’ HDC
20486	AUGER BIT, HEAVY DUTY 36”, 2” HEX, 4’ HDC
20039	AUGER BIT, HEAVY DUTY 6”, 2.56 ROUND, 4’HDC
20116	AUGER BIT, HEAVY DUTY 9”, 2.56 ROUND, 4’ HDC
20204	AUGER BIT, HEAVY DUTY 12”, 2.56” ROUND, 4’ HDC
20324	AUGER BIT, HEAVY DUTY 18”, 2.56 ROUND, 4’ HDC
20403	AUGER BIT, HEAVY DUTY 24”, 2.56 ROUND, 4’ HDC
20443	AUGER BIT, HEAVY DUTY 30”, 2.56 ROUND, 4’ HDC
20488	AUGER BIT, HEAVY DUTY 36”, 2.56 ROUND, 4’ HDC
157430	ROCK AUGER BIT, 6”, 2” HEX, 4’
157431	ROCK AUGER BIT, 9”, 2” HEX, 4’
157433	ROCK AUGER BIT,12”, 2” HEX, 4’
157435	ROCK AUGER BIT,18”, 2” HEX, 4’
157437	ROCK AUGER BIT, 24”, 2” HEX, 4’
157438	ROCK AUGER BIT 30”, 2” HEX, 4’
157439	ROCK AUGER BIT 36”, 2” HEX, 4’
20096	AUGER BIT, LIGHT DUTY 9”, 2” HEX, 4’ HDF
20183	AUGER BIT, LIGHT DUTY 12”, 2” HEX, 4’ HDF
20306	AUGER BIT, LIGHT DUTY 18”, 2” HEX, 4’ HDF
20386	AUGER BIT, LIGHT DUTY 24”, 2” HEX, 4’ HDF
20429	AUGER BIT, LIGHT DUTY 30”, 2” HEX, 4’ HDF

PART #	DESCRIPTION
20474	AUGER BIT,LIGHT DUTY 36”, 2” HEX, 4’ HDF
20025	AUGER BIT,LIGHT DUTY 6”, 2.56 ROUND 4’ HDF
20100	AUGER BIT, LIGHT DUTY 9”, 2.56 ROUND, 4’ HDF
20187	AUGER BIT, LIGHT DUTY 12”, 2.56” ROUND, 4’ HDF
20309	AUGER BIT, LIGHT DUTY 18”, 2.56 ROUND, 4’ HDF
20389	AUGER BIT, LIGHT DUTY 24”, 2.56 ROUND, 4’ HDF
20431	AUGER BIT, LIGHT DUTY 30”, 2.56 ROUND, 4’ HDF
20476	AUGER BIT, LIGHT DUTY 36”, 2.56 ROUND, 4’ HDF
22851	AUGER EXTENSION 24” X 2” HEX
22858	AUGER EXTENSION 48” X 2” HEX
22856	AUGER EXTENSION 24” X 2.56” ROUND
22863	AUGER EXTENSION 48” X 2.56” ROUND
23126	AUGER EXTENSION 48” X 2” HEX, VARIABLE LENGTH
23135	AUGER EXTENSION 72” X 2” HEX, VARIABLE LENGTH
21987	AUGER ADAPTOR, 2” FEMALE HEX TO 2.56” ROUND MALE
21990	AUGER ADAPTOR, 2.56” RND FEMALE TO 2” HEX MALE

ANGLE BROOMS

The **Sweepster® Angle Sweeper** by Paladin, has a faceted hood design that provides maximum strength at the ends of the hood where most stress and damage occur.

- Available in 60”, 72” and 84” widths
- 32” diameter brush
- Quick change core

PART #	DESCRIPTION
22072MM-0022	72” MANUAL ANGLE BROOM SSL MOUNT
22084MM-0022	84” MANUAL ANGLE BROOM SSL MOUNT
22060MH-0022	60” HYDRAULIC ANGLE BROOM SSL MOUNT
22072MH-0022	72” HYDRAULIC ANGLE BROOM SSL MOUNT
22084MH-0022	84” HYDRAULIC ANGLE BROOM SSL MOUNT

PICK UP SWEEPERS

Sweepster® Skid Steer Loader Hydraulic Drive Collection Sweepers by Paladin handles light and heavy-duty clean up in construction, municipal and industrial applications. Narrower overall attachment width for improved mobility and cleanup in confined areas.

- Hydraulic pump feature*
- Waterless dust abatement system (WDA)

*Optional feature depending on model.

PART #	DESCRIPTION
21560M-0022	60” PICK UP SWEEPER SSL MOUNT
21572M-0022	72” PICK UP SWEEPER SSL MOUNT
21584M-0022	84” PICK UP SWEEPER SSL MOUNT
VRS5M-0022	60” PICK UP SWEEPER W/ HIGH DUMP AND FRONT CASTER SSL MOUNT
VRS6M-0022	72” PICK UP SWEEPER W/ HIGH DUMP AND FRONT CASTER SSL MOUNT
VRS7M-0022	84” PICK UP SWEEPER W/ HIGH DUMP AND FRONT CASTER SSL MOUNT
28-10136	SPRINKLER KIT 25 GALLON TANK 205/VRS/215 12V FACTORY INSTALL
28-9139	SPRINKLER KIT 25 GALLON TANK 205/VRS/215 12V FIELD INSTALL

BUCKETS

Bradco® Buckets by Paladin, are available in many styles, sizes and patterns to fit any need.

- Various sizes & edge hole patterns for common bolt-on wear edges available to assist in your jobs requirements
- High strength steel construction
- Standard tooth bars and tooth bars that fit over bolt-on wear edges available
- Tooth or smooth edge & bolt-on edges with series 23 H&L teeth available

LOW PROFILE BUCKETS WITH EDGE AND SIDE CUTTERS	
PART #	DESCRIPTION
KD15120	BUCKET, 60" LPSF,W/EDGE & SIDE CUTTERS
KD111813	BUCKET, 68" LPSF,W/EDGE & SIDE CUTTERS
KD113900	BUCKET, 72" LPSF,W/EDGE & SIDE CUTTERS
KD16270	BUCKET, 78" LPSF,W/EDGE & SIDE CUTTERS
KD16180	BUCKET, 84" LPSF,W/EDGE & SIDE CUTTERS

LOW PROFILE BUCKETS WITH TEETH AND SIDE CUTTERS	
PART #	DESCRIPTION
KD33861	BUCKET, 60" LPSF,W/TEETH & SIDE CUTTERS
KD111814	BUCKET, 68" LPSF,W/TEETH & SIDE CUTTERS
KD113901	BUCKET, 72" LPSF,W/TEETH & SIDE CUTTERS
KD16265	BUCKET, 78" LPSF,W/TEETH & SIDE CUTTERS
KD16190	BUCKET, 84" LPSF,W/TEETH & SIDE CUTTERS

POST DRIVER

The Bradco® Post Driver is designed to be operated with an SSL or CTL for driving posts up to 10 feet in length and up to 8 inches in diameter. Works with round or square posts; also compatible for recatangles such as guard rails. Quick change collars allow for changing from a smaller post collar to a larger one in a matter of minutes. Up to 30 hit a minute.

PART #	DESCRIPTION
111487	PD4800 POST DRIVER ONLY **MUST CHOOSE OPTIONS
112491	8.0in SQUARE COLLAR W/STRIKER PLATE ASSEMBLY
112920	108in HOSE KIT W/ 1/2in QC

GRAPPLE BUCKETS

The **FFC® Brush and Scrap Grapples** by Paladin, have been designed to prevent the roll back interference that occurred on some newer models of skid steer loaders and also offers hose length options.

- Patented design withstands the demands of work in scrap handling, recycling, and other tough applications
- Full feature includes hardened pins, cushioned cylinder kit, and cylinder/hose guard for model 120

PART #	DESCRIPTION
123668	60" STANDARD DUTY SCRAP GRAPPLE W/ BOE (12860-0022) SSL MOUNT INCLUDES 88" HOSE KIT, 90 DEG CPL, & HOSE SAVER (103179)
123669	66" STANDARD DUTY SCRAP GRAPPLE W/ BOE (12866-0022) SSL MOUNT INCLUDES 88" HOSE KIT, 90 DEG CPL, & HOSE SAVER (103179)
123670	72" STANDARD DUTY SCRAP GRAPPLE W/ BOE (12872-0022) SSL MOUNT INCLUDES 88" HOSE KIT, 90 DEG CPL, & HOSE SAVER (103179)
123671	76" HEAVY DUTY SCRAP GRAPPLE W/ BOE (11876-0022) SSL MOUNT INCLUDES 88" HOSE KIT, 90 DEG CPL, & HOSE SAVER (103179)
123672	82" HEAVY DUTY SCRAP GRAPPLE W/ BOE (11882-0022) SSL MOUNT INCLUDES 88" HOSE KIT, 90 DEG CPL, & HOSE SAVER (103179)
123661	60" STANDARD DUTY BRUSH GRAPPLE (12260-0022) SSL MOUNT INCLUDES 88" HOSE KIT, 90 DEG CPL, & HOSE SAVER (103179)
123662	66" STANDARD DUTY BRUSH GRAPPLE (12266-0022) SSL MOUNT INCLUDES 88" HOSE KIT, 90 DEG CPL, & HOSE SAVER (103179)
123663	72" STANDARD DUTY BRUSH GRAPPLE (12272-0022) SSL MOUNT INCLUDES 88" HOSE KIT, 90 DEG CPL, & HOSE SAVER (103179)
123664	72" HEAVY DUTY BRUSH GRAPPLE (11372-0022) SSL MOUNT INCLUDES 88" HOSE KIT, 90 DEG CPL, & HOSE SAVER (103179)
123665	78" HEAVY DUTY BRUSH GRAPPLE (11378-0022) SSL MOUNT INCLUDES 88" HOSE KIT, 90 DEG CPL, & HOSE SAVER (103179)
123666	84" HEAVY DUTY BRUSH GRAPPLE (11384-0022) SSL MOUNT INCLUDES 88" HOSE KIT, 90 DEG CPL, & HOSE SAVER (103179)
ROOT RAKE, SKID STEER LOADER	
123685	72" ROOT RAKE UNIV SSL MOUNT W/ 84" HOSE KIT (121152)
123682	78" ROOT RAKE UNIV SSL MOUNT W/ 76" HOSE KIT (121152)
123683	84" ROOT RAKE UNIV SSL MOUNT W/ 84" HOSE KIT (121152)

MULTI-PURPOSE BUCKET (4-IN-1)

The **Bradco® 4-in-1 Multipurpose Bucket** functions as a loader bucket, clam, grapple, dozer, box scraper and bottom dump bucket.

- Made of lightweight material with heavy duty hinges and pins
- Evenly distributes the load and provides he ability to handle more load capacity

PART #	DESCRIPTION
108022	72" 4IN1 SKID STEER BUCKET (HEAVY DUTY), CHOOSE BOE & HOSE KIT
108024	78" 4IN1 SKID STEER BUCKET (HEAVY DUTY), CHOOSE BOE & HOSE KIT
108026	84" 4IN1 SKID STEER BUCKET (HEAVY DUTY), CHOOSE BOE & HOSE KIT
108023	72" 4IN1 SKID STEER BUCKET WITH TEETH (HEAVY DUTY), CHOOSE HOSE KIT
108025	78" 4IN1 SKID STEER BUCKET WITH TEETH (HEAVY DUTY), CHOOSE HOSE KIT
108027	84" 4IN1 SKID STEER BUCKET WITH TEETH (HEAVY DUTY), CHOOSE HOSE KIT
103577	HOSE KIT FOR 4IN1 BUCKET
15028	72" BOLT ON EDGE FOR 4IN1 BUCKET
16204	78" BOLT ON EDGE FOR 4IN1 BUCKET
16183	84" BOLT ON EDGE FOR 4IN1 BUCKET

AUTORAKE®

FFC® AutoRake® by Paladin, an easy to use site clean-up and soil preparation attachment. This unit can be mounted on three-point configuration (tractor) and is excellent for picking up windrows in support of power box rake operations.

PART #	DESCRIPTION
LAF6864-0022	66" AUTORAKE UNIV SSL MOUNT
LAF6874-0022	76" AUTORAKE UNIV SSL MOUNT

LANDSCAPE RAKES

Harley® and FFC® Power Rakes, by Paladin, are the highest quality, most durable and versatile power rakes available. They are widely regarded as the "gold standard" for power rakes by landscaping professionals. These rakes have been engineered to create the most optimal seedbed conditions leading to lush grass and beautiful landscaping.

PART #	DESCRIPTION
LANDSCAPE RAKES, SKID STEER LOADER	
M6M-0022	6' MANUAL ANGLE HARLEY RAKE, SSL
M6H-0022	6' HYDRAULIC ANGLE HARLEY RAKE, SSL
MX7H-0022	7' HYDRAULIC ANGLE HARLEY RAKE, SSL
MX8H-0022	8' HYDRAULIC ANGLE HARLEY RAKE, SSL
LAF5672-0022	72" MANUAL ANGLE DIRECT DRIVE POWER RAKE, SSL
LANDSCAPE RAKES, TRACTOR 3-POINT	
T6M-0052	6' MANUAL ANGLE TRACTOR 3 POINT HARLEY RAKE
T6H-0052	6' HYDRAULIC ANGLE TRACTOR 3 POINT HARLEY RAKE

CONCRETE CLAW

The FFC® Concrete Claw, is ruggedly designed for removing concrete sidewalks and driveways or on any construction site and can be used for shrub and stump removal.

PART #	DESCRIPTION
10024-0022	CONCRETE CLAW, SSL MOUNT

BRUSH CUTTERS

The **Ground Shark™ Standard Duty Brush Cutter** is designed to clear light to medium density brush and hardwoods up to 4" in diameter. The Ground Shark™ drive train runs smooth and quiet while moving easily to clear the toughest material.

- Replaceable skid shoes
- Bi-directional forged steel blades allow operator to cut in both directions extending operational life and reducing maintenance costs

PART #	DESCRIPTION
30360A-0022	60" STANDARD DUTY BRUSH CUTTER STANDARD FLOW,15-25 GPM 1/2" QD
30372A-0022	72" STANDARD DUTY BRUSH CUTTER STANDARD FLOW,15-25 GPM 1/2" QD
30378A-0022	78" STANDARD DUTY BRUSH CUTTER STANDARD FLOW,15-25 GPM,1/2" QDC

CONCRETE CHUTER

The FFC® Concrete Chuter is designed for accurate placement of concrete in tight spaces on job sites where cement trucks can't go. Never wheelbarrow or pump concrete again!

PART #	DESCRIPTION
11050-0022	½ YD CONCRETE CHUTER W/HOSES
11075-0022	¾ YD CONCRETE CHUTER W/HOSES

DOZER BLADE

Bradco® Dozer Blade by Paladin, with tilt attach, tilts the dozer blade for more precise grading, leveling and trenching. This means that you get to the next job quicker!

- Hydro-electric controlled angle and tilt, using only one loader valve
- Angle 30° right or left of center
- Tilt 10° off horizontal both directions
- Tilt indicator visible from operator's seat

PART #	DESCRIPTION
88861	7' DOZER BLADE, SSLMOUNT, ADD CONTROL BOX 15756 or SPECIFIC HARNESS
89681	8' DOZER BLADE, SSL MOUNT, ADD CONTROL BOX 15756 or SPECIFIC HARNESS
15756	UNIVERSAL CONTROL BOX, 12V

STUMP GRINDER

The **Bradco® Stump Grinder** by Paladin, is available in standard and high flow. The standard flow model has a 26" diameter cutting wheel allowing up to 10" of below ground cutting. and the high flow model has a 30" wheel allowing up to 12" of below ground cutting.

- Tooth pattern permits cutting from side-to-side and vertical directions
- Wheel and tooth options available
- Heavy-duty gearbox drives with torque arm motor support for longer motor and drive system life
- Easy access to all drive components allows for quick maintenance

PART #	DESCRIPTION
100319	STUMP GRINDER SG26, STANDARD FLOW ** MUST ORDER WHEEL, HOSES, & CONTROLS
101234	WHEEL ASSEMBLY, SQUARE TEETH
100984	HOSE KIT, 88", 1/2" QD
104367	UNIVERSAL CONTROL BOX, STUMP GRINDER

TRENCHERS

Bradco® Trenchers by Paladin, can mount to skid-steer loaders, compact skid-steer loaders and 3-point PTO HP hydrostatic tractors. Several boom lengths are available to match your job's specifications.

- Standard flow and high flow options are available
- Choose from various chain and teeth assemblies

PART #	DESCRIPTION
117765	TRENCHER ASSY,48" BOOM X 6" CHAIN (CUP TOOTH EVERY STATION), SSL MOUNT W/ 97" HOSE KIT
117766	TRENCHER ASSY, 48" BOOM X 6' CHAIN (70/30 TOOTH EVERY STATION), SSL MOUNT W/ 97" HOSE KIT

COLD PLANERS

The **Bradco® Cold Planers** by Paladin, is an effective tool for small milling jobs, as well as asphalt and concrete pothole and frost heave repair, curb cutting, pavement texturing and removal of traffic lane stripes and roadway around manholes.

The **FFC® Aspahlt Mills** by Paladin, can be used to make full depth utility cuts, mill frost heaves around manholes, restore proper drainage to pavement, add texture to pavement for skid resistance, and more.

PART #	DESCRIPTION
COLD PLANERS STANDARD FLOW SKID STEER LOADER	
101196	12" COLD PLANER STANDARD FLOW HYD SIDE-SHIFT
ASPHALT MILLS SKID STEER LOADER	
LAF5413-0022	16" COLD PLANER STD FLOW 3-LINE SSL MOUNT
LAF5424-0022	24" COLD PLANER HIGH FLOW 3-LINE SSL MOUNT W/ CONTROL BOX

SKID STEER ATTACHMENTS

PALLET FORKS

Bradco® Pallet Forks feature heavy-duty frames designed to handle up to 6,200 lb. fork capacities without taxing the loader's power or lift capacity.

- Lever style locks provide additional leverage when operating the tine latching mechanism
- Excellent see through visibility allows the operator to see the ends
- Custom branded fork carriage available

PART #	DESCRIPTION
30945-0022	PALLET FORK FRAME ONLY SSL MOUNT
67604	48" 4000# CAPACITY FORKS (PAIR)

SNOW BLOWERS

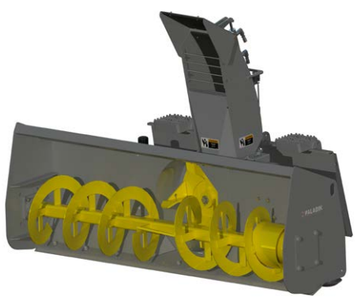

The **FCC® Snow Blower** throws snow as far as 45 feet, features a poly-lined chute and deflector for faster adjustments, and never requires a case drain.

- Blower is electrically controlled, and has hydraulically operated poly-lined chute and deflector
- Equipped with reinforced wrapper and adjustable skid shoes

PART #	DESCRIPTION
11060D-0022	60" SNOW BLOWER 14-21 GPM SSL MOUNT
11060E-0022	60" SNOW BLOWER 18-24 GPM SSL MOUNT
11072D-0022	72" SNOW BLOWER 14-21 GPM SSL MOUNT
11072E-0022	72" SNOW BLOWER 18-24 GPM SSL MOUNT
11084E-0022	84" SNOW BLOWER 18-24 GPM SSL MOUNT
11072G-0022	72" HIGH FLOW SNOW BLOWER UNIV SSL MOUNT, 19-34 GPM

SNOW PUSH

The **FFC Snow Push**, by Paladin is engineered of heavy-duty, fully welded steel with 3/8" thick end plates to capture and remove even the heaviest snow without leaving windrows or spillover. For SSL, Compact Utility Loaders, Small Wheel Loaders and Backhoe Loaders.

PART #	DESCRIPTION
23296-0022	8' LOW PROFILE SNOW PUSH SSL MOUNT
23220-0022	10" LOW PROFILE SNOW PUSH SSL MOUNT
23320-0022	10" 3' X 3' SNOW PUSH SSL MOUNT

SNOW BUCKETS

The **FCC® Snow Buckets** move large volumes of snow or other loose materials efficiently. Equipped with a cut-out back plate for better visibility.

- Quickly attaches to all skid-steer with universal hitch
- Optional bolt-on edge available

PART #	DESCRIPTION
11184-0022	84", 1.47YD (HEAPED) SNOW BUCKET (EDGE KIT REQUIRED)
11196-0022	96", 1.70YD (HEAPED) SNOW BUCKET (EDGE KIT REQUIRED)
11197-0022	96", 2.36YD (HEAPED) SNOW BUCKET (EDGE KIT REQUIRED)
11101-0022	101", 1.82YD (HEAPED) SNOW BUCKET (EDGE KIT REQUIRED)
11102-0022	101", 2.52YD (HEAPED) SNOW BUCKET (EDGE KIT REQUIRED)
16183	84" BOLT ON EDGE FOR SNOW BUCKET
FFC10084	96" BOLT ON EDGE FOR SNOW BUCKET
10094	101" BOLT ON EDGE FOR SNOW BUCKET

MINI AUGER DRIVES

- X1500 provides high torque
- 2.5625” round shaft (X900 & X1500 models)
- 2.0” hex shaft (X1500 model only)
- Over 30 auger bits available to fit your job specifications

PART #	DESCRIPTION
24861	X1500 AUGER DRIVE, 8.0 CU 2" HEX, MINI SSL UNIVERSAL MOUNT
24453	X1500 AUGER DRIVE, 8.0 CU 2.56" ROUND, MINI SSL UNIVERSAL MOUNT

AUGER BITS

PART #	DESCRIPTION
20035	AUGER BIT, HEAVY DUTY 6" 2.56" ROUND x 3'
20112	AUGER BIT, HEAVY DUTY 9" 2.56" ROUND x 3'
20200	AUGER BIT, HEAVY DUTY 12" 2.56" ROUND x 3'
20320	AUGER BIT, HEAVY DUTY 18" 2.56" ROUND x 3'
20399	AUGER BIT, HEAVY DUTY 24" 2.56" ROUND x 3'
20033	AUGER BIT, HEAVY DUTY 6" 2" HEX 3'
20109	AUGER BIT, HEAVY DUTY 9" 2" HEX x 3'
20198	AUGER BIT, HEAVY DUTY 12" 2" HEX x 3'
20318	AUGER BIT, HEAVY DUTY 18" 2" HEX x 3'
20397	AUGER BIT, HEAVY DUTY 24" 2" HEX x 3'

MINI BUCKETS

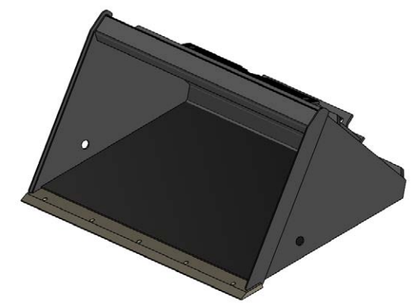

Bradco® Mini Buckets are available with Toro/Dingo, ASV and Bobcat MT Series mounts. Bucket widths 42” (4 and 6 cu. ft. capacity) and 48” (4 and 6 cu. ft. capacity). Buckets available with weld-on teeth or tooth bars.

PART #	DESCRIPTION
SMOOTH BUCKET, MINI SKID STEER UNIVERSAL MOUNT	
117506	36" (4 FT^3) SMOOTH BUCKET, MINI SSL
2000872	42" (4 FT^3) SMOOTH BUCKET, MINI SSL
107783	44" (7 FT^3) SMOOTH LIGHT MATERIAL BUCKET, MINI SSL
2000877	48" (6 FT^3)SMOOTH BUCKET, MINI SSL
TOOTH BUCKET, MINI SKID STEER UNIVERSAL MOUNT	
119300	36" (4 FT^3) TOOTH BUCKET, MINI SSL
19405	42" (4 FT^3) TOOTH BUCKET, MINI SSL
104579	48" (6 FT^3) TOOTH BUCKET, MINI SSL

MINI GRAPPLES

- 42”, 48”, and 54” widths available
- Hydraulic grapple with guarded cylinder
- 1,500 to 3,000 operating pressure (psi)

PART #	DESCRIPTION
BRUSH GRAPPLE, MINI SKID STEER UNIVERSAL MOUNT	
107036	42" BRUSH GRAPPLE, MINI SSL
107037	48" BRUSH GRAPPLE, MINI SSL
SCRAP GRAPPLE, MINI SKID STEER UNIVERSAL MOUNT	
107148	42" SCRAP GRAPPLE, MINI UNIVERSAL SSL MOUNT
123978	48" SCRAP GRAPPLE, MINI UNIVERSAL SSL MOUNT
TREE & SHRUB GRAPPLE MINI SKID STEER	
23410-0961	TREE & SHRUB GRAPPLE - MINI SSL
HARDSCAPE GRAPPLE MINI SKID STEER	
23548-0961	HARDSCAPE GRAPPLE - MINI SSL
JAWZ GRAPPLE MINI SKID STEER	
30430-0961	JAWZ ASSY, MINI JAWZ

MINI LANDSCAPE RAKE

- Direct drive motor is embedded within frame and drum providing optimal protection from dirt and debris.
- Adjustable Rhino-Hide barrier
- Specially shaped and placed carbide teeth ensure the best possible seedbed
- Easily removable end plates

PART #	DESCRIPTION
22748M-0961	48" HARLEY RAKE MANUAL ANGLE MINI SSL
22748H-0961	48" HARLEY RAKE HYDRAULIC ANGLE MINI SSL

MINI PALLET FORKS

- Adjustable tine widths
- Heavy-duty, easy on and off

PART #	DESCRIPTION
108366	PALLET FORKS, MINI SKID STEER UNIVERSAL MOUNT
106220	42" PALLET FORKS FOR 108366
106222	48" PALLET FORKS FOR 108366

MINI STUMP GRINDER

- Bearing mounted cutting wheel provides smooth, trouble-free operation
- Adjustable wheel cutting angle allows optimal cutting for any type of stump

PART #	DESCRIPTION
101866	STUMP GRINDER,MINI, 10 to 14 GPM (MUST SELECT MOUNT, WHEEL, & HOSES)
101868	UNIVERSAL MINI MOUNT (NON BOBCAT) FOR STUMP GRINDER
104374	BOBCAT MOUNT FOR STUMP GRINDER
101876	WHEEL ASSEMBLY W/BOLT ON TEETH
101874	HOSE KIT, FLAT FACE

MINI TILLERS

- Replaceable and reversible tines
- Adjustable depth guide
- 8 to 15 GPM recommended
- 1,500 to 3,000 operating pressure (PSI)

PART #	DESCRIPTION
2008000	40" TILLER, MINI SSL

TABLE OF CONTENTS ↑

MINI TRENCHERS

- 24”, 30”, 36” & 48” digging depths
- 6” to 12” wide chains available
- Operating pressure (psi) 2,000 to 3,000
- GPM requirements 6-10 or 10-16
- Standard tooth, shark tooth, or combo available

PART #	DESCRIPTION
118618	TRENCHER, 615,10-16 GPM 30" BOOM, 6.0" 70/30, MINI SSL
118621	TRENCHER, 615,10-16 GPM 36" BOOM, 4.5" 70/30, MINI SSL
113344	TRENCHER, 615,10-16 GPM 36" BOOM, 6.0" 70/30, MINI SSL

↑ TABLE OF CONTENTS

MINI SKID STEER ATTACHMENTS

MINI / BACKHOE / EXCAVATORS MACHINE CLASSIFICATION

METRIC TON CLASS	01mT	02mT	03mT	05mT		08mT		12mT	15mT
BACKHOE CLASS			BH <13'		BH 13'-17'		BH>17'		
CLASS	100 MINI	200 MINI	300 MINI	400 MINI	10	20	710	25	35
CWS CLASS		BE15	BE30	BE40	BE60	BE80		HE120	HE150
RANGE						R3	R4	R4	R5
Bobcat	E10	E20	"E26**, E32, E32i E35, E35i"	E42, E45, E50 E55, E63		E85		E145	
CASE CONSTRUCTION		CX17B, CX17C	CX26C**, CX30C CX31B, CX33C, CX36B, CX37C	CX55B, CX57C, CX60C	"580N 580SN 580SNWT 590N, 590SN"	"CX75C SR CX80C"		"CX130C, CX130D CX135C CS CX145C SR CX145D SR"	"CX160C CX160D"
CAT®	300.9D	301.4C, 301.5 301.7D, 301.7 CR301.8, 302 CR	302.4D**, 302.7C/DCR** 303ECR, 303.5ECR	304ECR, 304.5ECR, 305ECR, 305.5ECR, 306CR	415F2, 416F2, 420F2, 430F2	307E, 307.5, 308ECR, 309, 310	450F	311F, 312E, 313F, 314E, 315F	315D, 316E/F, 318E/F
DOOSAN				DX60-3, DX62R-3, DX63-3		DX85R-3		DX140-3/5, DX140LCR-3/5, DX140W-5	DX160, DX170-5, DX180-3/5 DX190, DX190W-5
GEHL		Z17	Z25**, Z35	Z45, Z55		Z80			
HITACHI		ZX17U-5	ZX26U-5**, ZX30U-5 ZX35U-5"	ZX50U-5, ZX60USB-5		ZX75US-5, ZX85USB-6		ZX130-6, ZX135-5	ZX160-6
HYUNDAI		R17Z-9A	"R25Z-9AK** R30Z-9AK R35Z-9A"	"R55-9A R55W-9A R60CR-9A"		"R80CR-9A R110-7"		R125-9A, HX130LCR R140W-9A, R140-9A, HX140L, HW140, R145-9A, HX145L	"R160-9A R180-9A R180W-9A HX160L, HX180L HW180"
IHI/KATO	9VX, 9VXE HD9V, HD9VX	17VX, 17VXE HD17V, HD-17VXE	25V-4**, HD25V4**, 30V-4, HD30V4, 35N-4, HD55N4, 35V-4, HD35N4	45V-4, HD45V4, 55V-4, HD55V4, 65V-4, HD65V4	55N-4, HD55N4	85V-4, HD85V4		HD512-7 HD514MR-7	
JCB	8008	8018, 18Z, 19C-1	8029**, 8035, 8040, 1CX, MIDI CX, 2CX, 3CX-COMPACT	8045, 8052, 8060, 45Z-1, 48Z-1, 55Z-1, 57C-1, 67C-1	3CX, 4CX, 1400 1500, 1700	JS70, 85Z-1, 86C-1, 90Z-1, 100C-1	3CX-SUPER 17, 4CX-SUPER 17	JS131, JS141 JS145, JZ145	JS160
JOHN DEERE		17G	26G**, 30G, 35G	50G, 60G	310L, 310SL 315SL, 410L	75G, 85G	710L	120D, 130G, 135G	160G
KOBELCO		SK17SR-5E	SK25SR-6E**, SK30SR-6E, SK35SR-6E	SK45SRX-6E, SK55S-RX-6E		SK75SR-3E, SK85CS-3E		SK115SR, SK130, SK135SR, SK140SR-5, ED160-5	SK160-5, SK170-10, ED190
KOMATSU	PC09-1	PC18MR-3	PC27MR-3**, PC30MR-5 PC35MR-3/5	PC45MR-3/5, PC55MR-3/5	WB146-5, WB156-5	PC78US-10, PC88MR-10		PC120-8, PC138US-10/11	PC160-8, PC170-10/11
Kubota	K008-3	KX018-4 KX41-3V, U17	KX71-3**, K91-3S2, KX033-4, U25S**, U35-4, B21, B26, L39, L45, L47, L48, M59**, R420S	KX040-4, KX057-4, KX121-3S, U45, U55-4, R520, SR530, R630	M62	KX080-4, KX080-4S			
LIEBHERR								R308, R914 Compact, R920 Compact	R317
Link-Belt CONSTRUCTION EQUIPMENT						75 X3 SA, 75 MB,80 X3 SA, 80 SB		130 X3/X4, 145 X3/X4 SA	160 X3/X4
LIUGONG		9018F	904D, 9035EZTS	906D		908D			915E
LONKING				CDM6065		CDM6085			CDM6150
MUSTANG	80M	170Z	250Z**, 350Z	450Z, 550Z		800Z		1000M	
NEW HOLLAND		E17C, E18B	E26C**, E27B**, E30B/C, E33C, E35B, E37C"	E55BX, E57C, E60C	B95C, B110C				
SANY		SY16C	SY26U**, SY35U	SY50, SY60		SY75C, SY95		SY135C*	
TAKEUCHI	TB210R	TB216, TB216H	TB230, TB235-2, TB240	TB260		TB280FR, TB290		TB2150	
VOLVO		EC20D	ECR25D**, EC27D** EC35C/D, ECR38D, ECR40D"	EC55C, ECR58D, EC60E, EW60E	BL60B, BL70B	ECR85D, ECR88D		EC140E, ECR145E, EWR150E	EC160E, EW160E, EW180E
WACKER NEUSON	803	ET16, EZ17 ET20, 1404	EZ28**, EZ36, EZ38, 3503"	EZ53, 6003, ET65, EW65		8003, ET90, EW100		ET145	
XCMG/INTENSUS								XE135B, XE150D	
YANMAR	SV08-1A/B	ViO17-A	ViO25-6A**, ViO35-6A	ViO45-6A/B, ViO55-6A		ViO80-1A, SV100-2A			

*Note: All manufacturer's names, symbols, numbers & descriptions are used for reference only & does not mean that any part is the product of these manufacturers or approved by these manufacturers.

METRIC TON CLASS	20mT	25mT	27mT	35mT	45mT	60mT	80mT	100mT
BACKHOE CLASS								
CLASS	45	55	60	70	100	150	200	250
CWS CLASS	HE200	HE250	HE250	HE300	HE400	HE650	HE850	HE1200
RANGE	R6	R7		R8	R9			
Bobcat								
CASE CONSTRUCTION	CX210C, CX210D, CX225 CS235C SR, CX245D SR	CX250C, CX250D	CX290C*, CX290D* CX300C*, CX300D*	CX350C, CX350D	CX470C, CX490D	CX700B, CX750D	CX800B	
CAT®	318C, 319, 320E/F, 321D 323F, 325F	324E, 325D	326F*, 328D*, 329E/F* 330F*, 335F*	330D, 336E/F	349E/F, 352F	365C, 374D/F	385C, 390D/F	
DOOSAN	DX210, DX210WE, DX225-3/5, DX235LCR-5	DX255-3/5	DX300-3/5*	DX340, DX350-5	DX420-3/5, DX450-3, DX490-3/5, DX530-3/5"			
GEHL								
HITACHI	ZX180-6, ZX190W-5, ZX210-6, ZX225 ZX245-5	ZX250-6	ZX290-5*, ZX300-6*	ZX350-6, ZX380-6	ZX470-6	ZX670-6	ZX870-6	EX1200-6
HYUNDAI	R210W-9A, HW210, R220-9A, HX220L, HX-235LCR	R260-9A, HX260L	R290*, R300-9A*, HX300L*	R320, R330-9A R360, R380-9A, HX330L, HX380L	R450, R480-9A R500, R520-9A, HX480L, HX520L			R1200-9A
IHI/KATO	HD823MR-7							
JCB	JS190, JS220 220X, JZ235	JS260	JS290*, JS300*	JS330, JS360 JS370	JS460			
JOHN DEERE	180G, 190GW, 210G, 225D, 245G	230GW, 240D, 250G	290G*, 300G*, 345G*	350G, 380G	470G	670G	870G	
KOBELCO	SK210-10, SK215, SK230SR-5, SK235SR-2, SK260SR-3, SK270SR-5	SK260-10	SK290*, SK295*, SK300-10*	SK350-10	SK485, SK500-10		SK850-9	
KOMATSU	PC210-10/11, HB215-2 PC228US-10, PC238US-11	PC240-10/11, PC308-8	PC290-10/11*	PC360-10/11, HB365-1/3, PC390-10/11	PC490-10/11	PC600-8, PC650-8/11	PC800-8	PC1250-8
Kubota								
LIEBHERR	R904, R906, R914, R918, R920, R922, R926 Compact	R924, R926	R934, R936, R936 Compact	R934, R938, R945, R946	R945, R946, R950, R954, R956	R960, R964, R966	R970, R974, R976, R980	
Link-Belt CONSTRUCTION EQUIPMENT	210 X3/X4, 235 X3 SA, 245 X4 SA	250 X3/X4	300 X3/X4*	350 X3/X4	470 X3, 490 X4	700 X2, 750 X4	800 X2	
LIUGONG	922E	925E	930E*	936E	950E			
LONKING	CDM6235			CDM6365	CDM6485			
MUSTANG								
NEW HOLLAND								
SANY	SY215C	SY235C, SY265C		SY335C, SY365C	SY500H			
TAKEUCHI								
VOLVO	EC210D, EW210D, EC220E, EW220E, EW230, ECR235E	EC250E	EC300E*, ECR305C* ECR355E*	EC350E, EC360, EC380E	EC460, EC480E		EC700C, EC750E	
WACKER NEUSON								
XCMG/INTENSUS	XE200C, XE210, XE215C	XE225CA, XE235C, XE250, XE265C		XE360C	XE470U/C/CK			
YANMAR								

*Please contact sales for proper coupler. ** 2.5mT machine model - 3mT bucket may contact boom or boom cylinder guard. Contact Engineering for tip radius of bucket for specific machine.

QUICK HITCH BUCKETS

Compatible with TAG Couplers

Quick Hitch Buckets are like other buckets used for excavation, digging and land clearing, with the added feature of a faster way to exchange different size buckets; this allows similar sized machines to share the same buckets. Quick Hitch buckets are compatible with TAG couplers.

PART #	DESCRIPTION
02HQ012-E00-X156S3-P-027	1 TO 2 METRIC TON MACHINE (12" QUICK HITCH BUCKET)
02HQ018-E00-X156S4-P-027	1 TO 2 METRIC TON MACHINE (18" QUICK HITCH BUCKET)
03HQ012-E00-X156S3-P-027	2.5 TO 3.5 METRIC TON MACHINE (12" QUICK HITCH BUCKET)
03HQ016-E00-X156S4-P-027	2.5 TO 3.5 METRIC TON MACHINE (16" QUICK HITCH BUCKET)
03HQ018-E00-X156S4-P-027	2.5 TO 3.5 METRIC TON MACHINE (18" QUICK HITCH BUCKET)
03HQ024-E00-X156S5-P-027	2.5 TO 3.5 METRIC TON MACHINE (24" QUICK HITCH BUCKET)
05HQ012-E00-X156S3-P-027	5 TO 6 METRIC TON MACHINE (12" QUICK HITCH BUCKET)
05HQ018-E00-X156S4-P-027	5 TO 6 METRIC TON MACHINE (18" QUICK HITCH BUCKET)
05HQ024-E00-X156S5-P-027	5 TO 6 METRIC TON MACHINE (24" QUICK HITCH BUCKET)
05HQ030-E00-X156S5-P-027	5 TO 6 METRIC TON MACHINE (30" QUICK HITCH BUCKET)
08HQ012-E00-X156S3-P-030	BACKHOE + 7 TO 8 METRIC TON MACHINE (12" QUICK HITCH BUCKET)
08HQ018-E00-X156S4-P-030	BACKHOE + 7 TO 8 METRIC TON MACHINE (18" QUICK HITCH BUCKET)
08HQ024-E00-X156S5-P-030	BACKHOE + 7 TO 8 METRIC TON MACHINE (24" QUICK HITCH BUCKET)
08HQ036-E00-X156S6-P-030	BACKHOE + 7 TO 8 METRIC TON MACHINE (36" QUICK HITCH BUCKET)

TABLE OF CONTENTS ↑

QUICK HITCH COUPLERS

The **Quick Hitch™ Coupler** provides a simple and reliable means of adding versatility to your excavator.

PART #	DESCRIPTION
027 QH	027 QUICK HITCH COUPLER
030 QH	030 QUICK HITCH COUPLER

*Machine specific item, call for actual part number

MAIN PIN THUMBS

PART #	DESCRIPTION
005HT	2.5 TO 3.5 METRIC TON MACHINE (MAIN PIN HYDRAULIC THUMB)
025HT	5 TO 6 METRIC TON MACHINE (MAIN PIN HYDRAULIC THUMB)
050HT	BACKHOE + 7 TO 8 METRIC TON MACHINE (MAIN PIN HYDRAULIC THUMB)

*Machine specific item, call for actual part number

↑ TABLE OF CONTENTS

MX BRUSH CUTTER

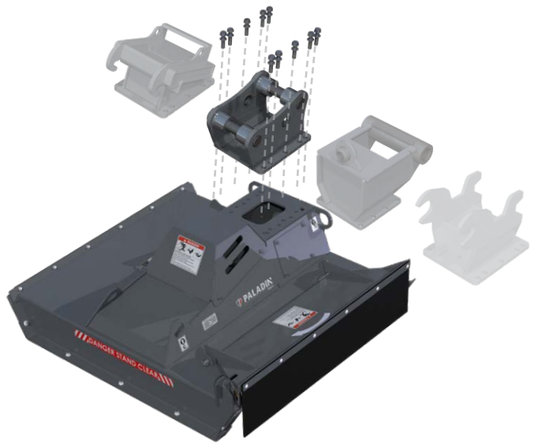

MX Series mini excavator brush cutters are an extension of Paladin's successful GroundShark series for skid-steers. Compatible with mini excavators in the 3-8 ton machine class, the MX Series facilitates a variety of applications, including over-fence brush management, embankment and ditch management, and rail right-of-way management. A solid formed T-1 steel deck and reversible AR400 cutting blades powers efficient processing of brush and trees up to 6" in diameter. Equipped with Paladin's bolt-on mounting system, it offers seamless configuration to a variety of coupling systems. When coupling requirements change, units can be quickly and easily reconfigured without welding or grinding, even in the field.

MODEL	MACHINE SIZE CLASS	FLOW*	CUTTING WIDTH	MAX BRUSH WIDTH	DIMENSIONS**	WEIGHT**	ADAPTER PATTERN
BC40MX10	3 mT	13 - 19	40"	4"	47" x 52" x 22"	660	A
BC40MX20	3 mT	19 - 26	40"	4"	47" x 52" x 22"	660	A
BC50MX10	5 mT	17 - 22	50"	5"	57" x 63" x 24"	1,050	B or C
BC50MX20	5 mT	22 - 34	50"	5"	57" x 63" x 24"	1,050	B or C
BC60MX10	8 mT	20 - 28	60"	6"	67" x 73" x 26"	1,240	B or C
BC60MX20	8 mT	28 - 35	60"	6"	67" x 73" x 26"	1,240	B or C

*Flow in GPM.
** Weight in Lbs. Does not include pallet or adapter.

OPERATOR PROTECTION

Patent-pending Tilt Latch™ engages when the cutter is curled up, keeping the blade shield locked down

AGGRESSIVE CUTS

Swings open when engaged with brush and trees, exposing the blades for deep, aggressive cuts

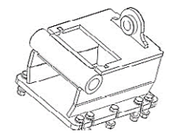

CP ADAPTERS:

CP Adapters leverage legacy Quick Hitch designs and are commonly used in Rental applications. Paladin CP adapters are designed to work with Paladin manufactured couplers and are available from 1/8 yard size (CP027), 1/4 yard (CP030) and 1/2 yard (CP034), and fit the full family of Strikeforce products.

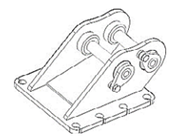

DEDICATED/CUSTOM ADAPTERS:

These adapters are designed to match the OEM machine interface exactly and include OEM matching Pin groups. As a "custom" offer they have a longer lead-time than the CORE Adapter Systems. Paladin provides Estimate responses for special requests but will include a CORE option recommendation in addition to the Custom response.

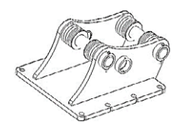

CORE ADAPTER:

These brackets are used for Pin-Grabber type couplers and Pin-Drive applications where exact pin center duplication is not required. These will not be suitable for Pin-Loc type applications or where pin center match is required to ensure a secure/safe fit-up to the carrier. Lead-time for the CORE will be less due to the standardized inventory possibilities. CORE brackets come complete with Pins and the width adjustment spacers.
IMPORTANT: understanding the type of installation is critical in determining whether a CORE Adapter is suitable. Please have the coupler information available, specifically the importance of Pin-Center to center dimensions, when consulting with sales team members.

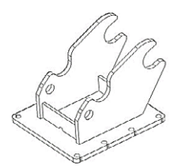

QUICK HITCH ADAPTER:

These Adapters are designed to match a machine OEM's proprietary (non-pin) mounting interface. These systems are used to reduce bucket offset in quick attach systems (as opposed to Pin Grabber type), thereby maximizing breakout force with the bucket. These systems can be used reliably with hydraulic attachments and Paladin provides a full offering of these Adapters for the StrikeForce product line. The defining feature of these types of systems is the use of geometry (shape) and not pins to attach the tool to the machine.

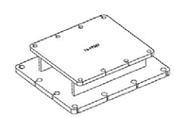

PATTERN ADAPTER:

These items convert one pattern family to a larger or smaller family to allow use of existing Mounting Adapters wherever possible. This reduces end customer cost and increases the velocity from the factory by leveraging existing designs and on-hand stock. A "Hardware Kit" will be required for the Adapter side.

HD BUCKETS & DITCH BUCKETS

Heavy Duty Buckets: Generally accepted as an industrial quality tool, these buckets are stronger and more wear-resistant than general purpose buckets.
Ditch Buckets: Perfect for ditch-cleaning applications. Designed with an abrasion-resistant "double bottom", which allows for longer bucket life.

PART #	DESCRIPTION
12mT - HD BUCKETS - NO SIDE CUTTERS - NO DEAD PINS	
12HE018-E33D-CJ25S3-J-5130	18" PIN ON BUCKET, VLV EC140/ECR145
12HE018-E33D-CJ25S5-J-2131	18" BUCKET KOBELCO 135SR/SRLC
12HE018-E33D-CJ25S5-J-7120	18" BUCKET JOHN DEERE 120C/CLC/C
12HE018-E33D-CJ25S5-J-9011	18" BUCKET CASE CX130/CX135
12HE018-E33D-CJ30S3-J-9010	18" BUCKET LINKBELT 130LX/135MSR
12HE024-E33D-CJ25S4-J-5130	24" PIN ON BUCKET, VLV EC140/ECR145
12HE024-E33D-CJ25S5-J-2131	24" BUCKET KOBELCO 135SR/SRLC
12HE024-E33D-CJ25S5-J-7120	24" BUCKET JOHN DEERE 120C/CLC/C
12HE036-E33D-CJ25S5-J-5130	36" PIN ON BUCKET, VLV EC140/ECR145
12HE036-E33D-CJ25S5-J-2131	36" BUCKET KOBELCO 135SR/SRLC
12HE036-E33D-CJ25S5-J-7120	36" BUCKET JOHN DEERE 120C/CLC/C
12HE036-E33D-CJ25S5-J-9010	36" BUCKET JCB JS130
12HE036-E33D-CJ25S5-J-9011	36" BUCKET CASE CX130/CX135
12HE042-E33D-CJ25S5-J-2131	42" BUCKET KOBELCO 135SR/SRLC
12HE042-E33D-CJ25S5-J-7120	42" BUCKET JOHN DEERE 120C/CLC/C
12HE042-E33D-CJ25S5-J-9011	42" BUCKET CASE CX130/CX135
12HE048-E33D-CJ25S6-J-5130	48" PIN ON PIN ON BUCKET, VLV EC140/ECR145
12HE048-E33D-CJ25S6-J-2131	48" PIN ON BUCKET KOBELCO 135SR/SRLC
12HE048-E33D-CJ25S6-J-7120	48" PIN ON BUCKET JOHN DEERE 120C/CLC/C
12HE048-E33D-CJ25S6-J-9010	48" PIN ON BUCKET JCB JS130
12HE048-E33D-CJ25S6-J-9011	48" PIN ON BUCKET CASE CX130/CX135
15mT - HD BUCKETS - NO SIDE CUTTERS - NO DEAD PINS	
15HE024-E33D-CJ30S5-J-9020	24" HD EXC BKT FOR CASE CX160
15HE036-E33D-CJ30S5-J-2151	36" BUCKET KOBELCO SK150/SK160/LC
15HE036-E33D-CJ30S5-J-7150	36" BUCKET JOHN DEERE 160C/160CLC/LC
15HE036-E33D-CJ30S5-J-9020	36" BUCKET CASE CX160
15HE042-E33D-CJ30S5-J-2151	42" BUCKET KOBELCO SK150/SK160/LC
15HE042-E33D-CJ30S5-J-7150	42" BUCKET JOHN DEERE 160C/160CLC/LC
15HE042-E33D-CJ30S5-J-9020	42" BUCKET CASE CX160

TABLE OF CONTENTS ↑

20mT - HD BUCKETS - NO SIDE CUTTERS - NO DEAD PINS	
20HE024-E33D-CJ35S3-J-7201	24" PIN ON BUCKET, VLV EC200/EC220/ECR235
20HE024-E33D-CJ35S5-J-7201	24" BUCKET JOHN DEERE 200C/CLC/LC
20HE024-E33D-CJ35S5-J-9030	24" BUCKET CASE CX210/CX225 & JCB 220/JS220
20HE036-E33D-CJ35S5-J-7201	36" PIN ON BUCKET, VLV EC200/EC220/ECR235
20HE036-E33D-CJ35S5-J-2201	36" BUCKET KOBELCO SK210
20HE036-E33D-CJ35S5-J-7201	36" BUCKET JOHN DEERE 200C/CLC/LC
20HE036-E33D-CJ35S5-J-9030	36" BUCKET CASE CX210/CX225 & JCB 220/JS220
20HE042-E33D-CJ35S5-J-7201	42" PIN ON BUCKET, VLV EC200/EC220/ECR235
20HE042-E33D-CJ35S5-J-2201	42" BUCKET KOBELCO SK210
20HE042-E33D-CJ35S5-J-7201	42" BUCKET JOHN DEERE 200C/CLC/LC
20HE042-E33D-CJ35S5-J-9030	42" BUCKET CASE CX210/CX225 & JCB 220/JS220
20HE048-E33D-CJ35S6-J-7201	48" PIN ON BUCKET, VLV EC200/EC220/ECR235
20HE048-E33D-CJ35S6-J-2201	48" BUCKET KOBELCO SK210
20HE048-E33D-CJ35S6-J-7201	48" BUCKET JOHN DEERE 200C/CLC/LC
20HE048-E33D-CJ35S6-J-9030	48" BUCKET CASE CX210/CX225 & JCB 220/JS220
12mT & 20mT DITCH CLEAN BUCKETS - W/BOLT ON EDGE - INCLUDES DEAD PINS	
7120050D060000N000YNCNP	60" DITCH CLEAN BUCKET, W/BOE, W/DEAD PINS JOHN DEERE 120C/CLC/C
9011050D060000N000YNCNP	60" DITCH CLEAN BUCKET, W/BOE, W/DEAD PINS CASE CX130/CX135
2131050D060000N000YNCNP	60" DITCH CLEAN BUCKET, W/BOE, W/DEAD PINS KOBELCO 135SR/SRLC
2201100D060000N000YNCNP	60" DITCH CLEAN BUCKET, W/BOE, W/DEAD PINS KOBELCO SK210
7201100D060000N000YNCNP	60" DITCH CLEAN BUCKET, W/BOE, W/DEAD PINS JOHN DEERE 200C/CLC/LC
9030100D060000N000YNCNP	60" DITCH CLEAN BUCKET, W/BOE, W/DEAD PINS CX210/CX225 & JCB 220/JS220

↑ TABLE OF CONTENTS

WHEEL LOADER / BACKHOE LOADER MACHINE CLASSIFICATION

The corresponding OEM with the machine size will provide you with the proper class attachment for your equipment.

CLASS (JRB Interchange)					
OEM	100 (Machine Dependent)	200 (416)	300 (416)	500 (416)	600 (418)
CWS Class	WL075/100	WL200	WL250	WL300	WL400
CASE CONSTRUCTION	580N, 580SN 580SNWT, 590N 590SN	521G	621G	721G	821G 921G
CAT®	415F2, 416F2 420F2, 430F2	450F, 906M, 907M, 908M, 910M, 926M, IT14G2"	930M	938M	950M 962M
DOOSAN			DL200-5 DL200TC-5	DL250-5 DL250TC-5 DL280-5	DL300-5 DL350-5
HITACHI		ZW120-5B ZW140-5B ZW140PL-5B	ZW150-5B ZW150PL-5B	ZW180-5B ZW180PL-5B	ZW220-5B ZW250PL-5B
HYUNDAI			HL940 HL940TM	HL955	HL960 HL965
JCB	3CX 17 4CX 17	409, 411 417	427ZX 427HT	437ZX 437HT	457ZX 457HT
JOHN DEERE	204L, 304L, 310L, 310SL, 315SL 410L, 244K	710K, 324K 344L, 444K	524L 544L	624L	644K 724K
Kawasaki	45ZV-2	60Z7	"62Z7 67Z7"	70Z7	"80Z7 85Z7"
KOMATSU		WA150-6	WA200-8	WA270PZ-8 WA320PZ-8	WA380-8 WA430-8
LIEBHERR		L526	L538	L546	L550 L556
LIUGONG	CLG816G	CLG835III Z CLG835III TC		CLG842III Z CLG842III TC	CLG856III Z
NEW HOLLAND	W50C W80C				
SANY				SW3025K	SW405K
SDLG			LG938L	LG948L	LG958 LG959L
VOLVO	L30G L35G	L50H	L60H L70H	L90H	L110H L120H

*Note: All manufacturer's names, symbols, numbers & descriptions are used for reference only & does not mean that any part is the product of these manufacturers or approved by these manufacturers.

CLASS (JRB Interchange)						
OEM	700 (420)	800 (420)	900 (422)	1000	1100	1200
CWS Class	WL500/550	WL600	WL700	WL800	WL900	WL1200
CASE CONSTRUCTION	1021G 1121G	1221G				
CAT®	966M 972M	980M 982M	986K 988K	990K	992K 993K	994K
DOOSAN	DL420-5 DL450-5	DL550-5				
HITACHI	ZW310-5B ZW330PL-5B	ZW370-5B ZW370PL-5BXRT	ZW550-5B			
HYUNDAI	HL970 HL975	HL980				
JCB						
JOHN DEERE	744K-III 824K-III	844K-III	944K			
Kawasaki	90Z7 92Z7	95Z7	115Z7	135ZV-2		
KOMATSU	WA470-8 WA480-8	WA500-8	WA600-8		WA800-3 WA900-3	WA1200-6
LIEBHERR	L566 L580	L586				
LIUGONG	CLG877III CLG888III					
NEW HOLLAND						
SANY						
SDLG						
VOLVO	L150H L180H	L220H L260	L350H			

* Machines marked with * please contact sales for proper coupler. Contact JRB's Customer Service for price and availability on non-current machine attachments.

GENERAL PURPOSE BUCKET

- Material weight 1800 to 2500 pounds
- Sloped-bottom design allows for maximum fill capabilities and material retention
- Slope bottom increases dump angle by 5º for more efficient dumping capabilities
- Minimum 50 yield steel construction
- Widths and cutting edge hole patterns drilled to OEM standard wear parts specifications

PART #	DESCRIPTION
90D1167	3.0 CYD GP BUCKET W/ EDGE 105.7" WIDE, JRB 416 COUPLER
94D0001-0913	3.0 CYD GP BUCKET W/ EDGE 100.4" WIDE, JRB 416 COUPLER
90D2730	3.5 CYD GP BUCKET W/ EDGE 107.88" WIDE, JRB 416 COUPLER
94D0002-0913	3.5 CYD GP BUCKET W/ EDGE 100.4" WIDE, JRB 416 COUPLER
90D3718	4.0 CYD GP BUCKET W/ EDGE 119.68" WIDE, JRB 418 COUPLER
90D3580	4.25 CYD GP BUCKET W/ EDGE 119.68" WIDE, JRB 418 COUPLER

SNOW PUSH

The **JRB Snow Pushers** allow for quick and easy installation by pushing with your loader bucket.

PART #	DESCRIPTION
23396-0057	3X3 96" SNOW PUSH BUCKET LIP MOUNT
23320-0057	3X3 120" SNOW PUSH BUCKET LIP MOUNT
23344-0057	3X3 144" SNOW PUSH BUCKET LIP MOUNT
23368-0057	3X3 168" SNOW PUSH BUCKET LIP MOUNT
23396-0913	3X3 96" SNOW PUSH JRB 416 COUPLER
23320-0913	3X3 120" SNOW PUSH JRB 416 COUPLER
23344-0913	3X3 144" SNOW PUSH JRB 416 COUPLER

CONSTRUCTION FORKS

JRB®'s Construction Forks allow you to safely navigate job sites carrying construction materials like pallets, pipes and related equipment with our rugged,newly designed CUFs.

PART #	DESCRIPTION
90K2001-0913	60" X 60" CONSTRUCTION FORKS JRB 416 COUPLER CLASS 200/300/500
90K2006-0913	96" X 60" CONSTRUCTION FORKS JRB 416 COUPLER CLASS 200/300/500
90K2007-0913	96" X 72" CONSTRUCTION FORKS JRB 416 COUPLER CLASS 200/300/500
90K2009-0913	96" X 96" CONSTRUCTION FORKS JRB 416 COUPLER CLASS 200/300/500
90K0005	106" X 60" CONSTRUCTION FORKS JRB 418 COUPLER CLASS 600
90K0105	106" X 72" CONSTRUCTION FORKS JRB 418 COUPLER CLASS 600
90K0751	106" X 96" CONSTRUCTION FORKS JRB 418 COUPLER CLASS 600

LOADER RAKE

JRB's Loader Rakes are ideal for land clearing, raking brush, and piling trees and limbs

PART #	DESCRIPTION
90Z0040	LOADER ROOT RAKE LESS CLAMP, 105" WIDE, JRB 416 COUPLER CLASS 200/300/500
90Z0046	LOADER ROOT RAKE W/ CLAMP, 105" WIDE, JRB 416 COUPLER CLASS 200/300/500
90Z0165	STACKING RAKE W/GRAPPLE CLAMP, 105" WIDE, JRB 416 COUPLER CLASS 200/300/500

SMALL MOUNTED BREAKERS

StrikeForce® Small Mounted Breakers provide cost effective options, and a flexible mounting system allowing installation onto multiple types of machines. These are truly versatile tools that add value to any contractor's toolbox.

PART #	DESCRIPTION
237250M-BLNK	SFB250 STRIKE FORCE 250# BREAKER, MOUNT AND HOSES ARE NOT INCLUDED
28-11090-0961	MOUNT FOR SFB250 FOR MINI SSL (non Bobcat)
237500M-0022	SFB500 STRIKE FORCE 500# BREAKER W/SSL BRACKET & HOSES
237750M-0022	SFB750 STRIKE FORCE 750# BREAKER W/SSL BRACKET & HOSES
237500R-E0852	SFB500 STRIKE FORCE 500# BREAKER W/INTEGRATED SSL BRACKET & 027QH TOP W/HOSES
23701KC-BLNK	SFB1000 STRIKE FORCE 1000# BREAKER, MOUNT AND HOSES ARE NOT INCLUDED
237015C-BLNK	SFB1500 STRIKE FORCE 1500# BREAKER, MOUNT AND HOSES ARE NOT INCLUDED
28-11092-E0333	030QH TOP CAP FOR SFB1000/1500

MEDIUM& LARGE MOUNTED BREAKERS

StrikeForce® Medium Breakers give the contractor a range of demolition and construction tools to address tasks commonly found on the jobsite. **Strike Force® Large Breakers** These breakers combine the power needed for heavy rock breaking and the speed needed for demolition and general construction work.

STRIKEFORCE MEDIUM & LARGE MOUNTED BREAKERS

AVAILABLE FOR PURCHASE - CALL FOR SPECIFIC ITEM NUMBER AND PRICING

HYDRAULIC PLATE COMPACTORS

Paladin® Boom Mounted TPC Plate Compactors provide the perfect combination of impulse force and frequency for handling trench and surface compaction needs. Each of the TPC models are focused on the needs of the contractor in road construction and repair, embankment preparation, utility and waste drain excavation backfill, as well as special needs in sheet, post, and plate driving for soil.

- "Outboard" shock isolator location provides stability for optimal transmission of impulse for effective compaction
- Shock isolators are angled to reduce damaging shear stresses in the isolator and extend life while providing a performance advantage in delivering compaction forces to the soil

PART #	DESCRIPTION
245250-BLNK	TPC250, 12" HYDRAULIC PLATE COMPACTOR, MOUNT NOT INCLUDED, NO HOSES
245350-BLNK	TPC350, 20" HYDRAULIC PLATE COMPACTOR, MOUNT NOT INCLUDED, NO HOSES
24501K-BLNK	TPC1000, 24" HYDRAULIC PLATE COMPACTOR, MOUNT NOT INCLUDED, NO HOSES
28-11090-E0852	027QH TOP CAP FOR TPC250
28-11091-E0852	027QH TOP CAP FOR TPC350
28-11092-E0333	030QH TOP CAP FOR TPC1000
24502K-BLNK	TPC2K, 24" HYDRAULIC PLATE COMPACTOR, MOUNT NOT INCLUDED, NO HOSES
24504K-BLNK	TPC4K, 26" HYDRAULIC PLATE COMPACTOR, MOUNT NOT INCLUDED, NO HOSES
24510K-BLNK	TPC10K, 36" HYDRAULIC PLATE COMPACTOR, MOUNT NOT INCLUDED, NO HOSES

COMPACTION WHEELS

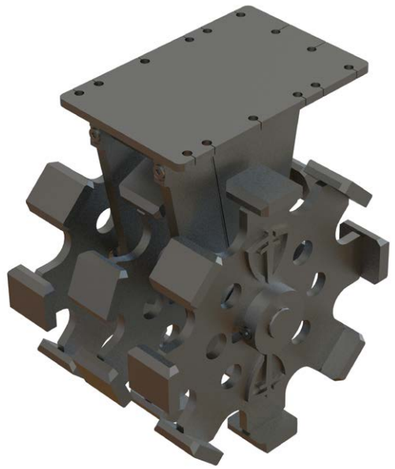

Paladin® Boom Mounted TWC Compaction Wheels provide a cost effective, durable, and user friendly compaction method for use in most soils and trench conditions. Strikeforce TWC Compaction Wheels are very effective in consolidating and condensing clay or fine mechanically stable (separates with difficulty) soils where other compaction means are less effective.

- Extended Compaction Pad life through use of abrasion resistant Hardox 450 material
- Enhanced durability through the use of an oversized axle shaft and large diameter bearings to minimize contact loads and lubrication requirement
- All compaction wheels come standard with the Scraper Blade

PART #	DESCRIPTION
24750012-E0852	TWC500-12, 12" COMPACTION WHEEL WITH 027 TOP CAP
24750018-E0852	TWC500-18, 18" COMPACTION WHEEL WITH 027 TOP CAP
24701K12-E0333	TWC1000-12, 12" COMPACTION WHEEL WITH 030 TOP CAP
24701K18-E0333	TWC1000-18, 18" COMPACTION WHEEL WITH 030 TOP CAP
24701K24-E0333	TWC1000-24, 24" COMPACTION WHEEL WITH 030 TOP CAP
24750012-BLNK	TWC500-12, 12" COMPACTION WHEEL, MOUNT NOT INCLUDED
24750018-BLNK	TWC500-18, 18" COMPACTION WHEEL, MOUNT NOT INCLUDED
24701K12-BLNK	TWC1000-12, 12" COMPACTION WHEEL, MOUNT NOT INCLUDED
24701K18-BLNK	TWC1000-18, 18" COMPACTION WHEEL, MOUNT NOT INCLUDED
24701K24-BLNK	TWC1000-24, 24" COMPACTION WHEEL, MOUNT NOT INCLUDED
24704K18-BLNK	TWC4K-18, 18" COMPACTION WHEEL, MOUNT NOT INCLUDED
24704K24-BLNK	TWC4K-18, 24" COMPACTION WHEEL, MOUNT NOT INCLUDED
24704K32-BLNK	TWC4K-18, 32" COMPACTION WHEEL, MOUNT NOT INCLUDED

DROP HAMMERS

The Cyclone Drop Hammer was developed specifically for the demolition of concrete flat-work allowing for easier removal in smaller and more manageable sizes. This enables reducing the size of the excavator required if pulling up the slab, better compaction for stock-piling and transportation, and smaller material handling for crusher feed.

- Up to 5X More Power to Weight than conventional hydraulic breakers
- Less Maintenance with no upper or lower bushings to grease or replace, no accumulators to re-charge, and no wear plates to rebuild or replace.
- Reduced Carrier Wear and Operator Fatigue the hammer is designed to have the tool rest directly on the concrete surface. This ensures that the impact load is transmitted squarely down to the concrete.

MODEL	PART #	DESCRIPTION
DH1500	DH1500	1,500 FT LBS / 2,034 NM, 32 BLOWS PER MINUTE DROP HAMMER WITH SKID STEER MOUNTING BRACKET
	DH1502	1,500 FT LBS / 2,034 NM, 32 BLOWS PER MINUTE DROP HAMMER WITH Q-TACH WALK BEHIND BRACKET
DH3500	DH3500	3,500 FT LBS / 4,746 NM, 32 BLOWS PER MINUTE DROP HAMMER WITH SKID STEER MOUNTING BRACKET
DH9000	DH9000	9,000 FT LBS / 12,200 NM, 23 BLOWS PER MINUTE DROP HAMMER WITH SKID STEER MOUNTING BRACKET

NOTES

SFB500
STRIKE

NO STEP
BRADCO
STAND CLEAR

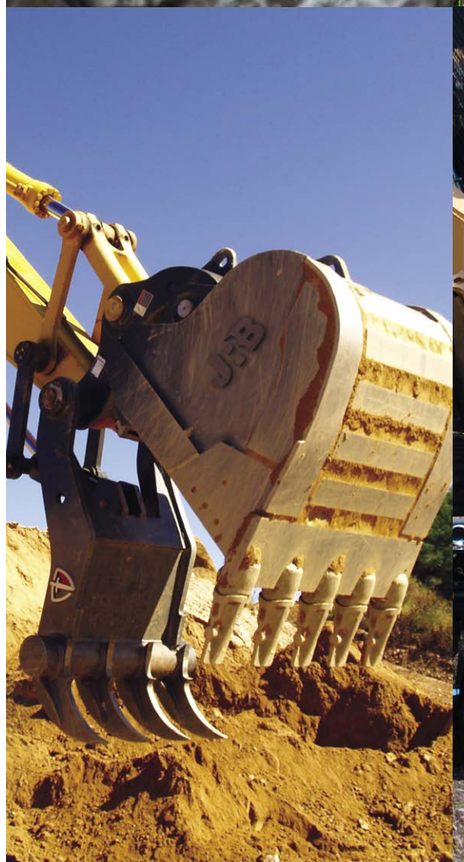
JCB

HARLEY

PENGO
P15

PERFORMANCE.
PARTNERSHIP.
SELECTION.

STANLEY®
Infrastructure

6430 SE Lake Rd.
Portland, OR 97222
833.723.1843
www.STANLEYinfrastructure.com

2021-06-30