STANLEY®

RW30 ROBOTIC WELDER

USER'S MANUAL

Safety, Operation and Maintenance

69893 2/2018 Ver. 10

DECLARATION OF CONFORMITY

DECLARATION OF CONFORMITY
ÜBEREINSTIMMUNGS-ERKLARUNG
DECLARATION DE CONFORMITE CEE
DECLARACION DE CONFORMIDAD
DICHIARAZIONE DI CONFORMITA

STANLEY
Hydraulic Tools

CE

I, the undersigned:
Ich, der Unterzeichnende:
Je soussigné:
El abajo firmante:
Io sottoscritto:

Weisbeck, Andy

Surname and First names/Familiennname und Vornamen/Nom et prénom/Nombre y apellido/Cognome e nome

hereby declare that the equipment specified hereunder:
bestätige hiermit, daß erklaren Produkt genannten Werk oder Gerät:
déclare que l'équipement visé ci-dessous:
Por la presente declaro que el equipo se especifica a continuación:
Dichiaro che le apparecchiature specificate di seguito:

1. Category:
   Kategorie:
   Catégorie:
   Categoria:
   Categoria: **Robotic Welder**
2. Make/Marke/Marque/Marca/Marca **Stanley**
3. Type/Typ/Type/Tipo/Tipo: **RW30**
4. Serial number of equipment:
   Seriennummer des Geräts:
   Numéro de série de l'équipement:
   Numero de serie del equipo:
   Matricola dell´attrezzatura: **All**

Has been manufactured in conformity with
Wurde hergestellt in Übereinstimmung mit
Est fabriqué conformément
Ha sido fabricado de acuerdo con
E' stata costruita in conformitá con

Directive/Standards Richtlinie/Standards Directives/Normes Directriz/Los Normas Direttiva/Norme	No. Nr Numéro No n.	Approved body Prüfung durch Organisme agréé Aprobado Collaudato
CEE CEE CEE CEE CEE CEE EN EN EN EN Machinery Directive Directive	89/336/CEE:03/05/89 92/31/CEE:28/04/92 93/68/CEE:22/07/93 1999/5/CEE:09/03/99 73/23/CEE:19/02/73 93/68/CEE:22/07/93 60974/1:06/00 60974/1/1A:04/01 169:12/92 50199:01/97 2006/42/EC:2006 2004/108/EC:15/12/04	J. Sauron S.A. CTF - France 19 rue Pierre JOSSE – Z.I. Les Bordes C.E. 2413 – 91924 BONDOUFLE Cedex Self

5. Special Provisions/Spezielle Bestimmungen/Dispositions particulières/Provisiones especiales/Disposizioni speciali: **None**

6. Representative in the Union: **Patrick Vervier**, **Stanley Dubuis 17-19, rue Jules Berthonneau-BP 3406 41034 Blois Cedex, France.**
   Vertreter in der Union/Représentant dans l'union/Representante en la Union/Rappresentante presso l'Unione

Done at/Ort/Fait à/Dado en/Fatto a Stanley Hydraulic Tools, Milwaukie, Oregon USA Date/Datum/le/Fecha/Data 6-22-11

Signature/Unterschrift/Signature/Firma/Firma Andy Weisbeck

Position/Position/Fonction/Cargo/Posizione Director of Product Development

STANLEY

TABLE OF CONTENTS

IMPORTANT

To fill out a product warranty validation form, and for information on your warranty, visit www.stanleyinfrastructure.com and select the Company tab > Warranty.

Note: The warranty validation record must be submitted to validate the warranty.

SERVICING: This manual contains safety, operation and routine maintenance instructions. STANLEY Infrastructure recommends that servicing of hydraulic tools, other than routine maintenance, must be performed by an authorized and certified dealer. Please read the following warning.

⚠WARNING

SERIOUS INJURY OR DEATH COULD RESULT FROM THE IMPROPER REPAIR OR SERVICE OF THIS TOOL.

REPAIRS AND / OR SERVICE TO THIS TOOL MUST ONLY BE DONE BY AN AUTHORIZED AND CERTIFIED DEALER.

For the nearest certified dealer, call STANLEY Infrastructure at (503) 659-5660 and ask for a Customer Service Representative.

SAFETY SYMBOLS

Safety symbols and signal words, as shown below, are used to emphasize all operator, maintenance and repair actions which, if not strictly followed, could result in a life-threatening situation, bodily injury or damage to equipment.

⚠	This is the safety alert symbol. It is used to alert you to potential personal injury hazards. Obey all safety messages that follow this symbol to avoid possible injury or death.
⚠ DANGER	This safety alert and signal word indicates an imminently hazardous situation which, if not avoided, will result in death or serious injury.
⚠ WARNING	This safety alert and signal word indicates a potentially hazardous situation which, if not avoided, could result in death or serious injury.
⚠ CAUTION	This safety alert and signal word indicates a potentially hazardous situation which, if not avoided, could result in death or serious injury.
CAUTION	This signal word indicates a potentially hazardous situation which, if not avoided, may result in property damage.
NOTICE	This signal word indicates a situation which, if not avoided, will result in damage to the equipment.
IMPORTANT	This signal word indicates a situation which, if not avoided, may result in damage to the equipment.

Always observe safety symbols. They are included for your safety and for the protection of the tool.

LOCAL SAFETY REGULATIONS

Enter any local safety regulations here. Keep these instructions in an area accessible to the operator and maintenance personnel.

SAFETY PRECAUTIONS

Tool operators and maintenance personnel must comply with the safety precautions given in this manual and on the stickers and tags attached to the tool and hose.

These precautions are given for your safety. Review them carefully before operating the tool and before performing general maintenance or repairs.

Supervising personnel should develop additional precautions relating to the specific work area and local safety regulations. Place the added precautions in the space provided.

The RW30 Robotic Welder will provide safe and dependable service if operated in accordance with the instructions given in this manual. Read and understand this manual and any stickers and tags attached to the tool before operation. Failure to do so could result in personal injury or equipment damage.

SHOCK HAZARD


Contact with live electrical parts can cause fatal accidents or serious burns. The electrode work piece circuit is live when electricity is supplied to the outlet. The supply circuit and the internal circuits of the machine are also live when the current is switched on. When welding the wire, the feeder, the feeder control panel and any metal parts in contact with the wire are live. Equipment that is incorrectly grounded constitutes a danger.

- Do not touch any live part.
- Wear insulated safety gloves that are dry and without any holes, and body protection.
- Insulate yourself from the work piece and from the ground with appropriate insulation to prevent physical contact with the work piece or the ground.
- Switch of the electricity supply or stop the machine before performing maintenance on this machine.
- Install and ground this machine correctly in compliance with the instruction manual and with local, governmental or national legislation.
- Check the ground of the power supply regularly. Ensure the ground wire of the mains cable is correctly connected to the ground terminal in the connection box or that the connector is connected to an output that is correctly grounded.
- When connecting the input, connect ground first. Double check the connections.
- Check the state of the mains lead and the insulation of the wires regularly – replace the lead immediately if its damaged. Bare wires can cause fatal accidents.
- Switch the machine off when not in use.
- Do not use cables that are worn, damaged, under dimensioned or badly spliced.
- Do not wrap or carry cables around your body.
- If the work piece is to be grounded, ground it with a separate cable – do not use the clamp or the cable of the work piece.
- Don't touch the electrode if you are in contact with the work piece, the ground or another electrode of another machine.
- Only use properly maintained equipment. Repair or replace any damaged components immediately. Carry out maintenance work on the machine according to the instruction manual.
- Wear a safety harness when working above ground.
- Anchor all panels and covers solidly.
- Fix the cable to the work piece or work bench with metal-on-metal contact, as near as possible to the construction.

WELDING HAZARDS

- RW30 emits light, noise sparks and slag that can damage eyes, skin, ears and eyes. Wear proper Personal Protection Equipment (PPE).
- The welding arc produces intense visible and invisible rays (ultraviolet and infrared) which can burn the eyes and skin. The noise generated can damage the ears. Metal particle or slag are projected into the air when chipping, grinding and when joints are cooling.

NOISE

- Wear approved earplugs.

RAYS FROM THE ARC

- Wear a welding mask, with an appropriate filter screen, to protect your eyes and face while welding or watching (see standards EN 169).
- Wear approved eye protection goggles that give lateral protection.
- Use screens or barriers to protect observers and ask others not to look at arc.
- Wear protective clothing, made of appropriate fire-proof material, and protective shoes.

FUMES AND GASES

- Welding produces fumes and gases. Inhaling these gasses can be damage your health.
- Avoid fumes. Do not inhale fumes.
- When working indoors, ventilate the area and use fumes evacuation equipment to evacuate welding fumes and gases.
- If ventilation is insufficient, use an approved air respirator.
- Read the safety recommendations concerning materials (MSDS) and the manufacturer's instructions concerning metals, consumables, coverings, cleansers and degreasing agents.
- Only work in confined spaces if they are well ventilated or if you are wearing an air respirator. Have a properly trained supervisor stand by. Welding fumes and gases

can accumulate and displace oxygen, which can lead to fatal accidents. Check there is no danger when breathing the air.
- Do not weld in areas where others are degreasing, cleaning or spraying. Heat and arc rays can react with other vapors and form gases which are highly toxic.
- Do not weld coated metals, such as galvanized steel, lead or cadmium plated metal, until the coating has been removed from the area to be welded. Ensure the area is well ventilated and wear an air respirator.

GAS CYLINDERS
- Cylinders of welding gas contain gas under pressure. If a cylinder is damaged, it can explode. As cylinders of gas are part of the welding environment, they should be handled with caution.
- Protect gas cylinders from excessive heat, shock, slag, exposed flames and sparks from the welding arc.
- Store cylinders upright in a stationary rack or cylinder holder so that they cannot fall over.
- Keep cylinders away from welding circuits or any other electrical circuit.
- Never place a welding torch on a gas cylinder.
- A welding electrode should never make contact with a gas cylinder.
- Never weld a pressurised cylinder, as they can explode.
- Only use protective welding gas cylinders, regulators, hoses and fittings designed for this specific purpose. Ensure they and associated items are in good condition.
- Do not stand in front of the gas outlet when opening the gas valve on a cylinder.
- Keep the valve protection cap in place except when using or connecting the cylinder.
- Read and follow the instructions concerning the use of cylinders of compressed gas and associated equipment and the other publications listed in the safety standards.

WELDING CAN CAUSE FIRE OR EXPLOSIONS
- Welding container-like objects such as tanks, drums or pipelines can cause such objects to burst.
- Sparks are projected from the welding arc. Sparks, hot items and hot equipment can cause fire and burns.
- Accidental contact of the electrode with metal objects can cause sparks, explosions, overheating or fire. Before welding in such cases, check that there is no danger.
- Protect yourself and others from sparks and hot metal.
- Do not weld in places where sparks can fall on flammable substances.
- Move flammable substances at least 10.7 metres/35 feet from the welding arc. If this is not possible, cover them carefully with approved protective covering.
- Sparks and other hot welding matter can propagate from one area to another through small cracks and openings.
- Check for any fire that may start and have a fire extinguisher on hand.
- Do not weld container-like objects such as tanks, drums or pipelines unless they have been properly prepared.
- Connect the cable to the work piece, as near as possible to the welding area, to avoid having to feed the current over long hazardous distances, which could cause electrocution or fire.
- Do not use welding equipment to defrost frozen pipes.
- When not in use, remove the rod from the electrode holder.
- Wear grease-free clothing, such as leather gloves, a heavy shirt, hemless trousers, safety footwear and headgear.
- Before welding, remove all flammable substances from your pockets, such as matches or lighters.

EXHAUST FUMES
- Motors emit toxic exhaust and fumes can be fatal.
- Use the equipment outdoors in an open and well ventilated area.
- When using the equipment indoors, evacuate exhaust fumes away from fresh air intake vents.

MOTOR FUEL
- Do not fill with fuel while smoking, near a source of sparks or a naked flame.
- Don’t fill the tank to the brim. Leave space for fuel to expand.
- Stop the motor and let it cool down before checking or filling with fuel.
- Do not spill fuel. If fuel spills, clean it up before starting the motor.

MOVING ENGINE PARTS
- Moving engine parts, such as fans, rotors and driving belts, can cause serious hand injury. Articles of loose clothing can become caught.
- Keep all trap doors and panels properly in place or closed.
- Ask qualified personnel to remove the safety devices or other covers, in order to carry out maintenance or repairs.
- To avoid the motor accidentally starting while carrying out maintenance work or repairs, disconnect the cable from the negative (-) terminal of the battery.
- Keep hands, hair, loose clothing and tools away from engine parts.
- After maintenance work or repairs, replace all trap doors, panels, covers and other protective devices, before starting the motor.

SAFETY PRECAUTIONS

	Moving engine parts can cause bodily injury. Before working on the generator, remove the spark plugs or fuel injectors to prevent the motor from accidentally starting. Block the flywheel while working on the generator.
	Metal and dirt particles can cause injury to the eyes. Wear safety glasses that also offer lateral protection.
	Static Electricity can damage the components on the electric board. Before manipulating cards or other components, connect an earth wire to the earth terminal. Use antistatic packing material for storing, moving or transporting PC cards.
	Magnetic fields created by high voltage can interfere with the workings of pacemakers. Pacemaker wearers should keep their distance. Pacemaker wearers should first consult their doctor before going near any place where welding operations are being carried out.
	Read the instructions. Only use original spare parts. Replace the fuel injectors and the fuel system air bleeder as indicated in the motor instruction manual.
	MAKE SURE SPARKS FROM THE ENGINE EXHAUST DO NOT START A FIRE 1. Use an approved spark arrester on the motor exhaust wherever or whenever required – check the legislation in vigor.
	LOW VOLTAGE AND FREQUENCIES can damage electrical equipment such as motors. 1. Switch off or disconnect the equipment before starting or stopping the motor.
	EXCESSIVE WEAR can cause EQUIPMENT TO OVERHEAT. 1. Allow time for equipment to cool. 2. Reduce the current or operating cycle before restarting to weld. 3. Respect the rated operating cycle.

STANLEY

OPERATION

OVERVIEW

The RW30 is an electric arc welding controller to be used for gas-free sheathed wires. It is unbeatable on railroad worksites for performing maintenance and repairs on rails and track devices, railways, tramways, metros, shuttles, etc.

The RW30, after programming, automatically executes the reloading of worn sections and accidental surface defects (on treads, rail butt joints, lateral wears, track devices), or the deposits of “safety stainless steel beads”.

The RW30 controls the motorized movement of the welding head in the X-axis (length) and Y-axis (width) for work over a surface area of 400 mm by 350 mm.

The RW30 frame is made of composites, aluminum and stainless steel. This principle of construction was retained to combine lightweight and excellent behavior under bad weather conditions.

The RW30 is sold as standard with:
-1 RW30 Frame
-1 Rail Gripping Set
-1 Torch Support for the Pull Gun
-1 Charlie Control Box with its Connecting Cable

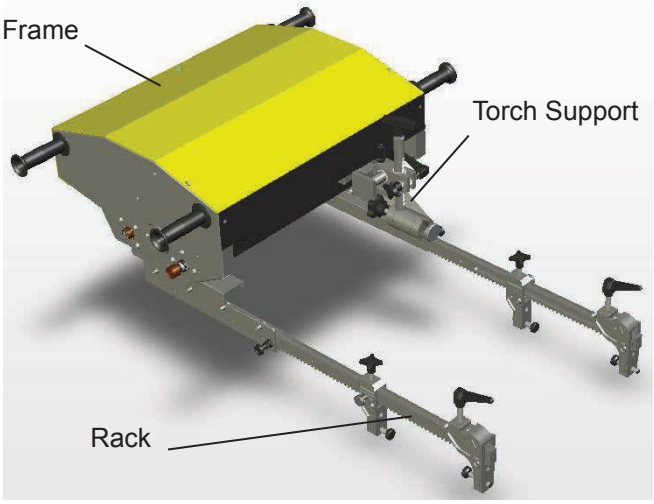

PREPARING THE RW30 FOR OPERATION

CLAW VERSION

1. Position the claw on the rail.

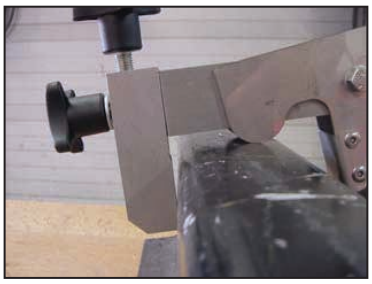

2. Adjust the sliding jaw and tighten.

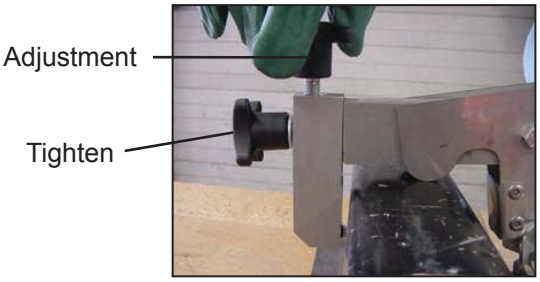

3. Check the jaw angle and reference supports.

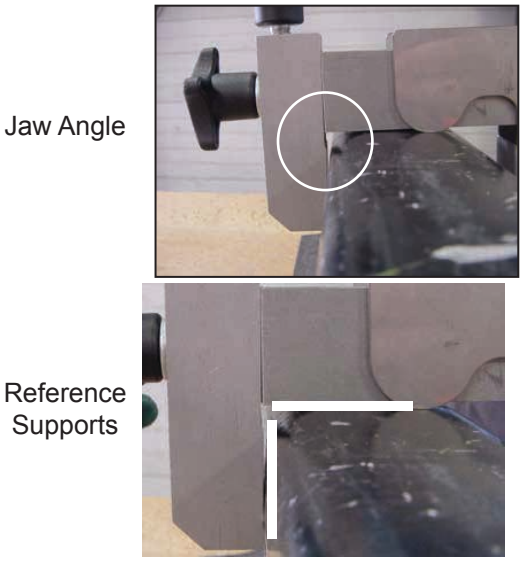

4. Set anti-slip bolt.

5. Assemble the mounting brackets by disengaging the stop pin, inserting the two brackets together and engaging the stop pin to secure.

Summary of Steps shown above.

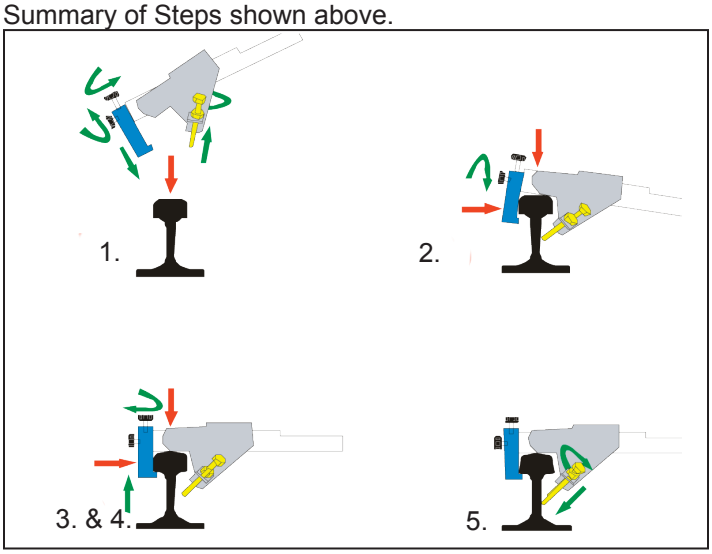

CLAMP VERSION

1. Disengage the stop pin on the mounting bracket, insert the rack, adjust to one of the three positions and engage the stop pin.

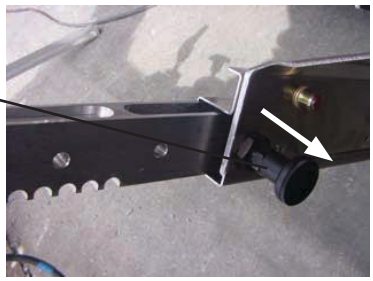

2. Slide in and engage the stop pin to the rack.

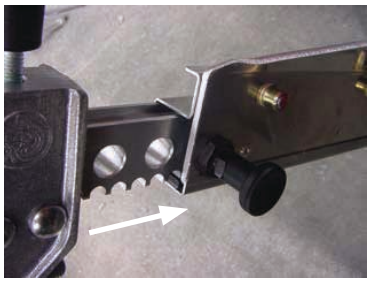

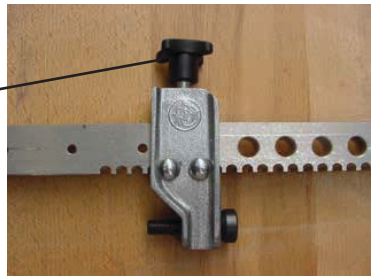

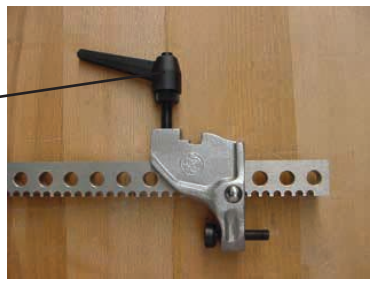

Adjusting the Clamp

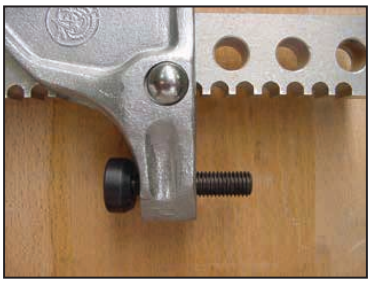

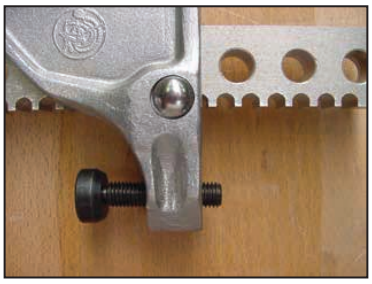

Summary of steps shown above.

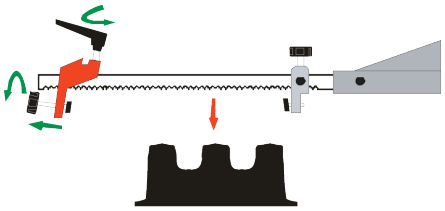

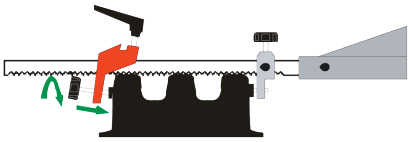

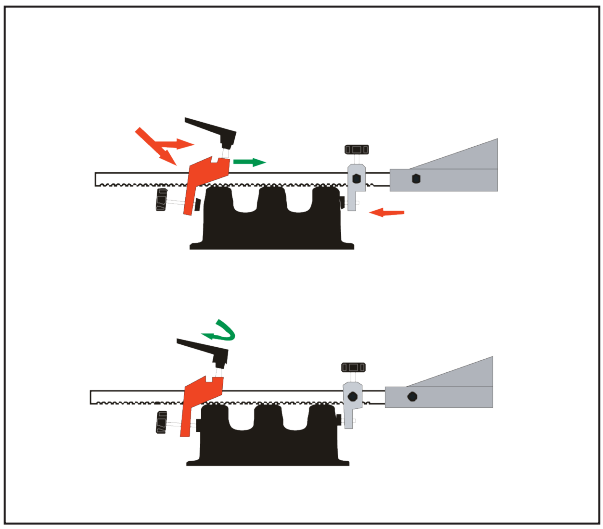

CONNECTING THE WIRE FEED/ WELDING TIP TO THE RW30

1. Place the welding tip into the support.

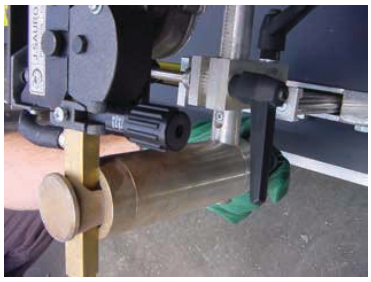

2. Support swivel blocking lever.

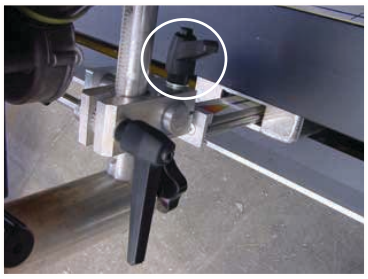

3. Support stick-out lever.

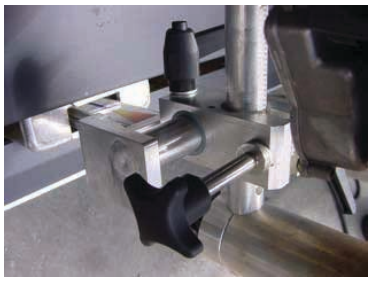

SETTING THE STICK OUT

The ideal setting is 30 mm. Use the template markers to check for proper distance.

30 mm Ideal Setting

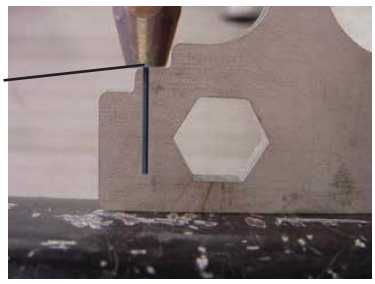

OPERATING THE RW30 & THE CHARLIE CONTROL UNIT

1. Turn ON the main switch on the RW30.

2. Unlock the ON/OFF switch on the Charlie Control Unit located on the right side of the unit.

AUTOMATIC TRACK MODE

After preheating, this mode is used on carbon steel track for continuous surface work on three or four-sided octagonal polygons.

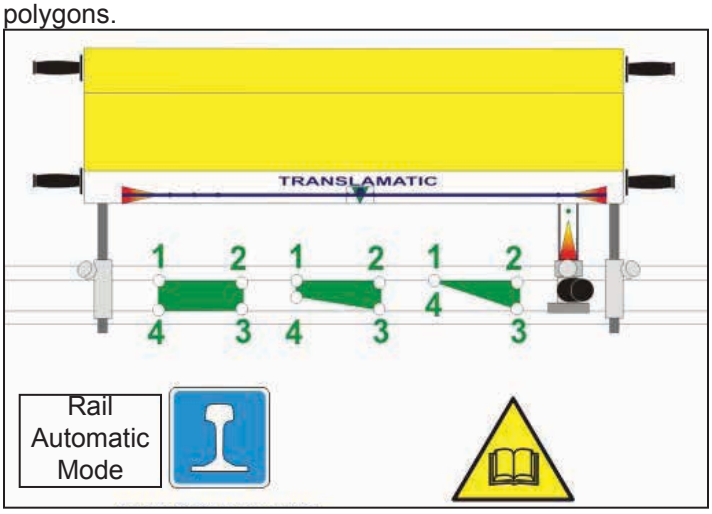

AUTOMATIC POINTS/FROG MODE

With no preheating, this mode is used on manganese steel points and frogs. For strip-by-strip work alternately of 1 to 3 three or four-sided polygonal surfaces.

After preheating, this mode is used on carbon steel points or frogs for continuous surface work on three or four-sided polygons.

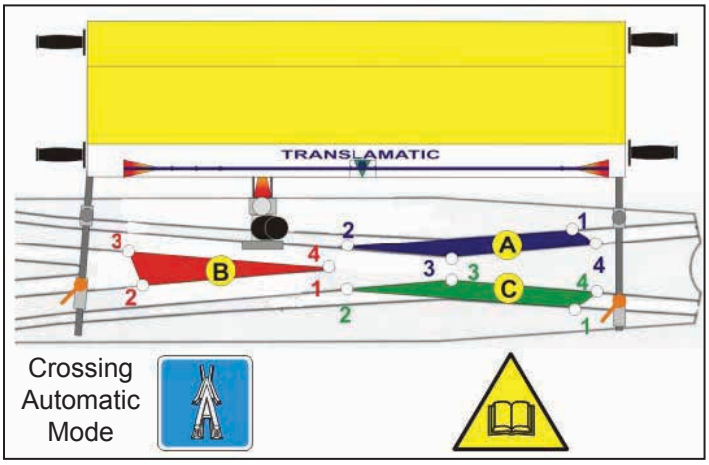

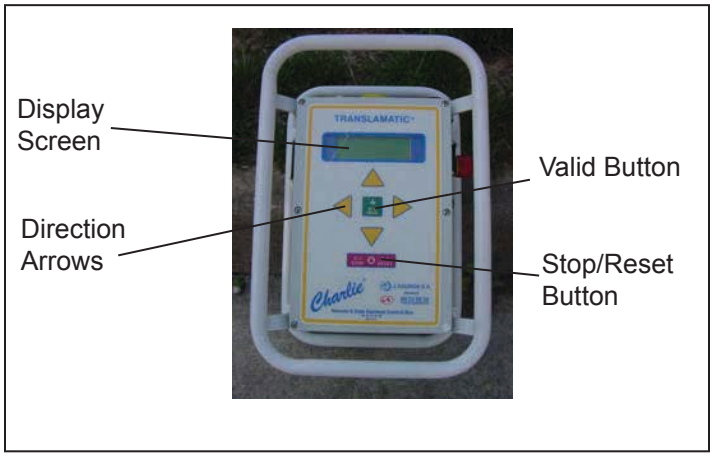

Charlie Control Unit

A computerised control unit to command the welding cycle, Charlie® is presented in a polycarbonate-housing unit equipped with a liquid crystal display and a six-keypad keyboard under lexan for man-machine dialog. It's 5 metre shielded mains cord can be wrapped around its tubular-shaped chassis.

The Charlie® control unit is adapted for on-site work. It's protection rating classifies it for uses under all weather conditions.

THE "CHARLIE" CONTROL UNIT CONTROLS

The SCREEN displays messages as well as tracing information for the user.

The VALID is used to validate the current step. During a cycle, it is used to display the welding U and I.

The STOP button is used to return to the previous step. During a cycle, it is used to momentarily or definitively stop the welding cycle.

The UP and DOWN arrows are used to scroll through the alphanumeric character list during the tracing data acquisition stage. In the setting stage, it is used to move the head along the Y-axis.

The LEFT and RIGHT arrows are used to scroll through the alphanumeric character list during the tracing data acquisition stage. In the setting stage, it is used to move the head along the X-axis.

LANGUAGE SETTING

Different languages may be accessed and selected when the first message "HELLO" appears by using the PLUS key. Translations of the message "HELLO" into different languages according to geographic areas are then displayed each time the PLUS key is pressed.

OPERATION

Below are screen examples of scrolling through the alphanumeric character list.

In tracing mode

Examples: scrolling up the list

Examples: scrolling down the list

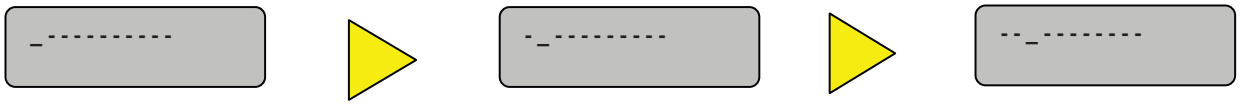

Examples: moving the cursor from left to right

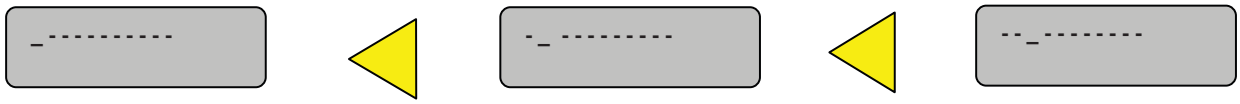

Examples: moving the cursor from right to left

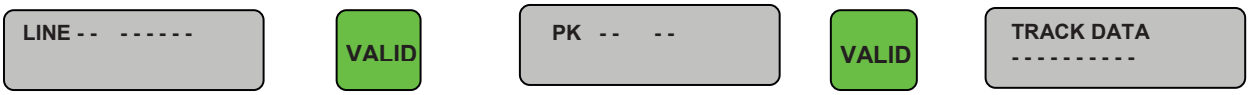

Examples: moving forward through the operator dialogue

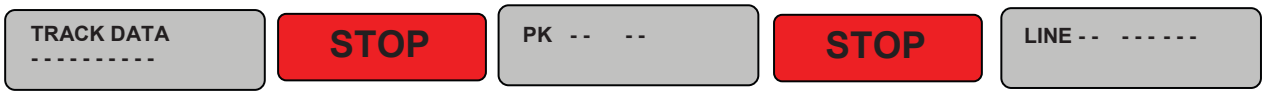

Examples : moving back through the operator dialogue

In welding mode

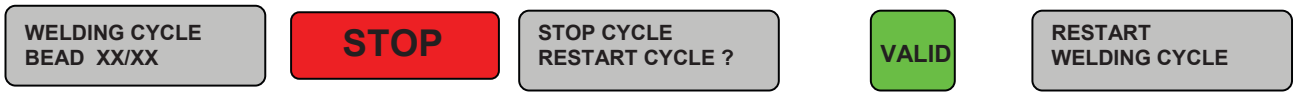

Example: momentary stop in the welding cycle

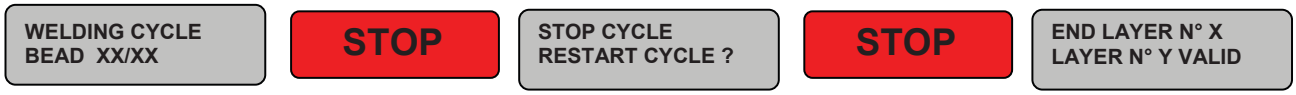

Example: definitive stop in the welding cycle

STANLEY

SETTING THE DATE AND TIME

To set the date and time, scroll until “DATE AND TIME” is displayed. Set the date and time by pressing the PLUS or MINUS keys. Confirm using the VALID key.

Depending on how the unit is configured, the “DATE TIME” message may not be displayed if the most succinct level of operator dialogue is used.

PRINTING DATA

To print the data stored in memory:

1. Make sure that the unit is connected to a power source.

2. Connect either a serial printer (9-pin connector) or a parallel printer if the unit is equipped with a parallel interface (25-pin connector).

When using a serial printer, make sure:

- The serial printer communication parameters are set correctly:
  - 9600 bauds
  - No parity
  - 8 data bits
  - 1 stop bit

- The correct serial cable is used.

3. Make sure the printer is ONLINE and READY.

4. Turn on the unit and scroll to the IMPRESSION step, available by the automatic detection by the system of the presence of a printer.

- Select the output mode:
  - Welding number
  - Operator ID
  - Date
  - All

5. Confirm choice using the VALID key.

INFORMATION ON DATA TRACKING

MANUAL DATA ENTRY

Some areas may require manual data entry:

- Operator stamp
- Location, district code, line, mileage point, track and rail line
- Type of metal deposition
- Type of power source
- Type of rail
- Type of resurfacing.

Two types of manual entries are possible:

1. Character by character mode.

Pressing the PLUS or MINUS keys causes the allowable characters to be displayed each character is confirmed by the VALID key.

2. Pre-programmed values.

Pressing the PLUS or MINUS keys causes the various pre-programmed values to be displayed. Each value is then confirmed by pressing the VALID key. When the characters “----” appear, this indicates characters available for manual character-by-character entry.

AUTOMATIC DATA ENTRY

Data can also be acquired by reading bar codes.

Depending on the software installed in the unit and according to the user companies’ specifications, data may be acquired automatically. Depending on these specifications, data may be required or optional.

The software includes a standard operator description card with a 30-digit ISO bar code.

OPERATOR DIALOGUE

Power up:

Memories Test

Then:

HELLO

Change language - press the arrows:

or

CTRL.PROG x.xxx
CHARLIE Nxxxxxxx

Display software version and Charlie serial number.

NO ALIGNMENT

This mode allows to perform free polygons from 3 to 4 sides.

- Setting the points without restriction (beads direction : Position O1 to Position O2).
- When setting the 4 points, point 4 can be out of the vertical alignment of point Position O1; without automatic control of any alignment.
- Welding mode « bead by bead ».

ALIGNMENT
OK

Simple welding mode: Shapes like rectangle, triangle and butt welding.

- Non stop welding our bead by bead.
- Realization with or without surrounding.

Changing welding modes by pressing:

or

Validate by pressing:

VALID

Corrections can be made by pressing:

RESET

ALIGNMENT
OK

Note: This is also effective during all welding cycle.
To go to the next step, press:

VALID

To step back to the previous step, press:

RESET

SPEED : 30
cm/mn

Welding speed displayed cm/min (1 cm/min equals to 0.4 inch/min) (adjustable value in the parameter menu).

Allow to move the torch according into 2 axis « X » et « Z ».

LAYER 1
TORCH: PO1

Set point Position O1. Define the resurfacing area.

PO2
TORCH:

Set point Position O2. The torch cans only moves on the « X » axis.

PO3
TORCH:

Set point Position O3. The torch cans only moves on the « Z » axis.

PO4
TORCH:

OR

PO4
TORCH: →

OR

PO4
TORCH: ← →

Set point Position O4. This point should only be set vertically from point Position O1 with automatic tone of this position.

LENGTH: xxmm
WIDTH: xxmm

Display the length and the width of the setting shape (1 mm equals to 0.04 inch).

SURROUND ?
YES - VALID

SURROUND ?
NO - VALID

Surrounding selection: « YES », or « NO », (continuing bead from Position O1 to Position O2 then to Position O3 then to Position O4 and finally to Position O1).

NUMBER BEADS:
xx

Display the number of beads that will be made during the resurfacing (the surrounding is not included in this number). It is possible to modify this number if needed by pressing:

▲ or ▼

SPACING: x.xx mm
WELD.TIME: xxmin

Display of the step between each bead, (distance in mm, 1 mm equals to 0.04 inch) and estimate welding time in minutes.

BEADS 1 BY 1 ?
YES - VALID

BEADS 1 BY 1 ?
NO - VALID

Welding mode choice: bead by bead, « YES », or continue, « NO ».

If « YES », welding bead by bead (Torch is moving at the beginning of the next bead right after previous bead is done).

If « NO », beads are done in “continue”.

WELDING CYCLE
VALID

If VALID key is pressed, Torch will move to starting point of Position O1. Welding will start.

While welding:

RETURN TORCH TO
INITIAL POINT

Torch moves to starting point of the welding or at the beginning of the new bead if “bead by bead” mode has been selected.

WELDING CYCLE
SURROUND

Surrounding welding if that option has been selected.

WELDING CYCLE
BEAD xxx/yyy

Shows the bead’s number in welding, « xxx », and the total number of beads of the whole resurfacing of the area, «yyy».

If « bead by bead » option is selected, the following screen appears at the end of the previous bead and after the torch is set.

VALID TO START
FOLLOWING BEAD

If VALID key is pressed, torch will move to the starting point of the next bead.

RETURN TORCH TO
INITIAL POINT

Torch return to starting point and start welding of the next bead.

END LAYER N : 1
LAYER N : 2 - VAL

When resurfacing is over, the following message proposes to set a new resurfacing cycle:

If VALID key is pressed, you will have to set a new welding area. (As previously seen).

If RESET key is pressed:

NEUTRAL POINT ?
TRANSPORT - VALID

Allow to place the torch in « Parking » position.

If VALID key is pressed, torch will move to « Parking » position.

If RESET key is pressed, back to message:

HELLO

NO ALIGNMENT

⚠ Note: This is also effective during all welding cycle.

To go to the next step press the VALID key.

To step back to the previous, press the RESET key.

SPEED : 30
cm/mn

Welding speed displayed cm/min (1 cm/min equals to 0.4 inch/min) (adjustable value in the parameter menu).

RETRACTING
POINT

Selection of Torch position after the welding of each bead (evacuation point).

The setting is done as:

PO1
TORCH:

Set point position O1.

PO2
TORCH:

Set point position O2.

PO3
TORCH:

Set point position O3.

TRIANGLE ?
NO - VALID

OR

TRIANGLE ?
YES - VALID

Triangle can be weld: if « NO », set point Position O4. If « YES », needed number of beads will be display.

PO4
TORCH:

Set point position O4.

NUMBER BEADS:
xx

Display the number of beads that will be made during the resurfacing (the surrounding is not included in this number). It is possible to modify this number if needed by pressing:

or

SPACING : x.xx mm
WELD.TIME : xxmin

Display of the step between each bead, (distance in mm, 1 mm equals to 0.04 inch) and estimate welding time in minutes.

-Setting can be made up to 3 shapes:

SETTING SHAPE X ?
NO - VALID

SETTING SHAPE X ?
YES - VALID

Option to repeat the same shape or change the size and shape as previously indicated.

During welding:

RETURN TORCH TO
INITIAL POINT

Torch moves to starting point of the first bead.

WELDING CYCLE
BEAD xxx/yyy

Shows the bead's number in welding, « xxx », and the total number of beads of the whole resurfacing of the area, «yyy».

MOVE TORCH

Torch will moves to retracting point after bead.

VALID TO START
FOLLOWING BEAD

Press VALID key to start the next bead.

END LAYER N : 1
LAYER N : 2 - VAL

If VALID key is pressed, you will have to set anew welding area. (As previously seen).

If RESET key is pressed:

NEUTRAL POINT ?
TRANSPORT - VALID

Allow to place the torch in « Parking » position.

If VALID key is pressed, torch will move to « Parking » position.

If RESET key is pressed, back to message:

HELLO

STOP AND RESTART OF WELDING CYCLE

During the welding, in whatever mode you have selected, stopping the welding cycle is always possible:

Pressing the RESET key will stop the weld cycle.

STOP CYCLE
RESTART CYCLE ?

To restart the welding cycle, press VALID key.

According to what mode you are using, a correction of the exact positioning of the torch during the stopping can be done:

-Maximum correction: 1 cm following the 2 axis « X » and « Z »

To stop the welding cycle, press the RESET key.

ERROR MESSAGES

During the setting of the points, some errors message can appear:

Set Position O2:

MIN LEN : 30mm !
LENGTH : xx mm

The distance between points Position O1 and Position O2 must be minimum or equal to 30mm on « X » axis. (This message will be displayed only if the distance between Position O1 and Position O2 < 30mm). Note : this distance (30mm equals to 1.18 inch) is set in the parameters menu.

Set Position O4:
-In mode « ALIGNMENT OK »

UNVALID POINT
RETURN TO PO1

Position O4 must be vertical from Position O1.

When the beads number has been modified:

ERROR !!!
SPACING > xx.x mm

The step is bigger than the maximum allowed step. Raise the number of beads.

ERROR !!!
SPACING < xx.x mm

The step is smaller than the minimal allowed step. Reduce the number of beads.

These 2 values can be modified in the parameters menu.

ERROR
BEADS NUMBER > 3

The number of beads must be superior at 3.

DIV ERROR

Show an inappropriate calculation not allow by the software.

TROUBLESHOOTING

PROBLEM	CAUSE	SOLUTION
The <<ON>> TRANSLAMATIC's green light does not work.	<<ON/OFF>> Switch.	Check it's good position and it's good working order.
	The Alimentation cable is cut.	Check the alimentation cable.
	Alimentation plug.	Check the alimentation plug.
	Alimentation fuse or circuit breaker.	Check the primary alimentation.
The <<ON>> TRANSLAMATIC's green light works, but the Charlie box doesn't work.	Link cable between the TRANSLAMATIC and the Charlie box.	Check the connections or change the cable.
	Charlie box fuse.	Check the fuse.
	Respect the <<ON>> process order.	Put <<ON>> the TRANSLAMATIC before putting the Charlie box "ON".
	Charlie Box.	Try with another Charlie box.
	Interface card.	Check if the interface card alimentation's green light is alight during the cycle. Call our After Sales Department.
	Stabilized alimentation out of service.	Check the alimentations tension, normally 27V in CC. Call our After Sales Department.
The welding support head does not move on one, or several axis.	Charlie box.	Try with another Charlie box.
	Charlie box keyboard.	Check the good working order of the keyboard contacts. Check the good working order of the keyboard using it in the test mode for example. Call our After Sales Department.
	Interface card.	Check the connections. Check the cards lights are alight during a moving command. Call our After Sales Department.
	Axis engines cards.	Check if the cards lights are alight during a moving command. Switch the connections between the two engines and then recheck the moving of the torch (the movements are reversed). Call our After Sales Department.
	Translations screw mechanically blocked.	Check if the screw is not top-blocked on the stop bumpers, the ball bearing or on the cardan. Unscrew manually the screw if it is possible. Call our After Sales Department.

TROUBLESHOOTING

PROBLEM	CAUSE	SOLUTION
Uncontrolled speed of the torch, no high speed or speed is not usual.	Charlie box.	Try with another Charlie box. Change the Charlie box card.
	coders pulses defect.	Check the coder connection on the right side and on the bottom of the interface card (J3 connector side). Replace the interface card.
	Axis engines cards.	Check if the cards light are alight during a moving command. Switch the connections between the two engines and then recheck the moving of the torch (the movements are reversed). Call our After Sales Department.
	Interface card.	Check all the connections. Check if the cards light are alight during a moving command. Replace the interface card. Call our After Sales Department.
	Couple engine + coder.	Replace the couple engine + coder.
No wire feeding.	The PGA	Close or set up the wires pressure with the PGA rollers.
	The Roll n' Roll.	Check the wires drum and set the Roll n' Roll brake.
	Cables.	Check the connections and the PGA alimentation cable.
	Charlie box.	Try with another Charlie box. Check if the welding command light is alight on the interface card.
	Link cable between the TRANSLAMATIC and the Charlie box.	Check the connections or change the cable.
	Welding trigger opened (welding control connector).	Check the closing of the welding trigger with an ohm meter (value < to 20 Ohms) between the pins 3 and 4 of the 7 points connector, or C and D of the Amphenol connection 19 points.
	Stabilized alimentation out of service.	Check the alimentations tension, normal 27V in CC. Call our After Sales Department.
Wire feeding OK, but no welding.	Ground cable.	Make sure that the ground cable is connected.
	Interface card.	Check if the cards lights are alight during a moving command. Call our After Sales Department.
	Arc welder generator.	Check the parameters and the good operation of the arc welder. Call our After Sales Department.

SPECIFICATIONS

RW30110 / RW30112

Power	115V, 60Hz, 175W
X Axis Movement	400 mm / 15.7 in.
Y Axis Movement	350 mm / 13.7 in.
Length	925 mm / 36.4 in.
Width	650 mm / 25.5 in.
Height	440 mm / 17.3 in.
Weight	25 kg / 55 lbs
Charlie Control Box Weight (with 5m of cable)	3 kg / 6.6 lbs
Pull Gun Weight (without wire reel)	12 kg / 26.4 lbs

RW30120

Power	230V, 60Hz, 150W
X Axis Movement	1250 mm / 49.2 in.
Y Axis Movement	350 mm / 13.7 in.
Length	1510 mm / 59.4 in.
Width	830 mm / 32.6 in.
Height	430 mm / 16.9 in.
Weight	34 kg / 74.9 lbs
Charlie Control Box Weight (with 5m of cable)	3 kg / 6.6 lbs
Pull Gun Weight (without wire reel)	17 kg / 37.4 lbs

NOTICE

In addition to the safety precautions in this manual, observe the following for equipment protection and care.

- Check that the pin holder is not burnt or not holding the pin tightly. If not, remove the ring holder, clean all the parts and squeeze the fingers of the pin holder together.
- Check the cables on the gun from time to time for damage. Replace as required.
- Check that the lift level is correct with lift level tool.
- Always store the tool in a clean dry space, safe from damage or pilferage.
- Always keep critical equipment markings, such as warning stickers and tags legible.
- Equipment repair should be performed by experienced personnel only.
- Do not use the equipment for applications for which it was not intended.

RW30 HEATER INSTALLED 2009 OR EARLIER

5
Front Cover

4
Back Cover

2
Heater Element

Thermostats

RW30 COLD WEATHER UPDATE KIT (70716)

INCLUDES THE FOLLOWING

Item No.	Part No.	Qty	Description
1	70716	1	RW30 Cold Weather Update Kit (Includes Items 2-9)
2	70719	1	Heater Element (110 V, 400 W)
3	70720	1	Thermostat (Red)
4	70718	1	Back Cover
5	70717	1	Front Cover
6	70721	1	Screw Kit
7	70722	1	Charlie Heater Kit
8	70723	1	Butt End Flask
9	71000	1	Thermostat (Blue)

7
Charlie Heater 70722

2
Heater Element

9
Thermostats (Blue)

3
Thermostats (Red)

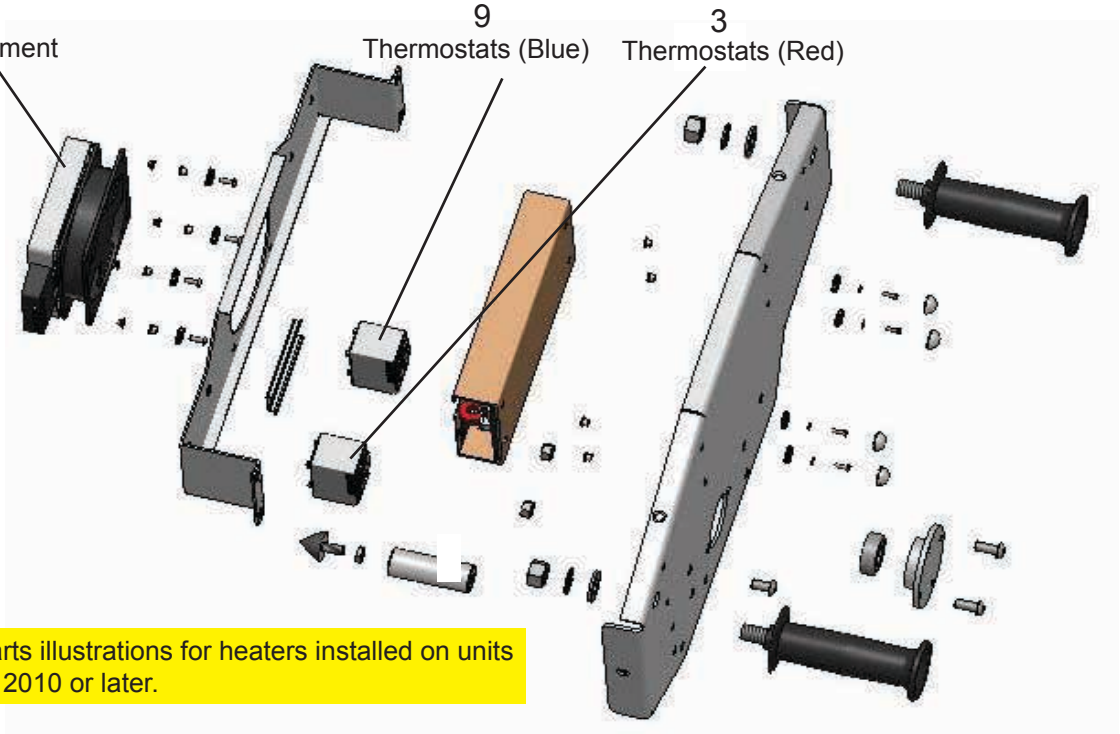

See parts illustrations for heaters installed on units built in 2010 or later.

ACCESSORIES & PARTS

Item No.	Part No.	Qty	Description
1	52736	1	Cable - Welder, Robotic
2	52738	1	Kit - Track Wheel Welder, Robotic
3	52739	1	Wire - Coated Weld Std Rail
4	52740	1	Wire - Coated Weld Mn Rail
5	52741	1	Box - Transport
6	60875	1	Ground Clamp for Frog
7	60876	1	Ground Clamp for Rail
8	62328	1	Carbon Frog Insert
9	62350	1	Angle Attachment
10	65439	1	Welding Cable (Negative 15 M)
11	65441	1	Welding Cable (Positive 15 M)
12	67090	1	Pre-Heater (Carbon Steel Frogs)
13	69835	1	PGA Power Supply Cable (Pull Gun)
14	69833	1	Lincoln (HD), Wire Feed Cable
15	69836	1	Screen for Charlie
16	65443	1	Pull Gun Head
17	65444	1	Torch 4 M
18	65447	1	Kit
19	65449	1	Stick Out Gauge
20	65450	1	Serial & Parallel Option
21	65451	1	Stick Holder
22	65453	1	Pre-Heater Ramp
23	66642	1	Pull Gun
24	66643	1	Inverter
25	66644	1	Torch
26	66766	1	Tool Case (with Tools)
27	66767	1	Glasses
28	66768	1	Mask, Automatic Darkening
29	66769	1	Mask, Manual
30	66773	1	Cable, 10 M (Generator to Robot)
	Cables - RW30110BN Only		
31	68208	1	Charlie to Robot Cable (All Models)
32	68209	1	Power Cable (RW30110BN Only)
33	68210	1	Wire Feed Cable (Miller, Lincoln) (RW30110BN Only)
34	68211	1	Wire Feed Cable (0X0) (RW30110BN Only)
	RW30110 / RW30112 / RW30120 Models Only		
35	65445	1	Wire Feed Cable
36	65442	1	Power Cable without End Plug
37	68208	1	Charlie to Robot Cable

Item No.	Part No.	Qty	Description
38	69823	1	Roll Un Roll Drum Holder
39	69824	1	Blue bag for Charlie
40	69827	1	Male base, 6 P + gnd (wire feeder electrical conn)
41	69828	1	Plug for Male Base (Protective)
42	69832	1	Male base, 3 P + gnd (power cord)
43	69822	1	Adaptation Box
44	73637	1	Charlie Lexan Keypad cover (Note: this is the overlay only for the control box with led screen and push pad, not the entire box)
45	73307	1	Push pin for clamp 
46	73314	1	Option Roll for 2.0mm Welding Wire

STANLEY

SPARE PARTS

Item # 1	Qty 1

Trigger Cord 70780

Item # 2	Qty 1

Power Cord Primary 70781

Item # 3	Qty 1

Rack & Pinion 66551
(Includes Pinion Item 4)

Item # 4	Qty 1

Pinion & Rack 66551
(Includes Rack Item 4))

Item # 5	Qty 1

Motor/Board Cable 70786

Item # 6	Qty 1

PGA Cable 70787

Item # 7	Qty 1

Charlie Cable 68208

Item # 8	Qty 1

Power Supply Cord 70785
Y axis

Item # 9	Qty 1

Power Supply Cord 70784
X Axis

Item # 10	Qty 1

Power Supply Cord 70783 Internal

Item # 11	Qty 1

Charlie Box 65446

Item # 12	Qty 1

Charlie Main Board 69889

Item # 13	Qty 1

Interconnection Board 64969

Item # 14	Qty 1

Motor Board 64961

Item # 15	Qty 1

Power Supply 69830

Item # 16	Qty 1

On/Off Switch 69831

Item # 17	Qty 1

Motor X 64963

Item # 18	Qty 1

Motor Y 64962

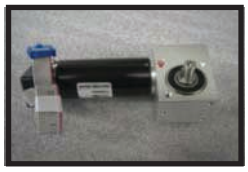

Item # 19	Qty 1

Power Cord LED 70782

Item # 20	Qty 1

Charlie Box Fuse 70774

SPARE PARTS

Item # 1	Qty 1

Bearing Y Axis 66533

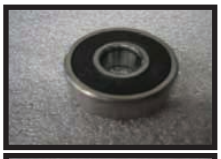

Item # 2	Qty 1

Bearing X Axis 64950

Item # 3	Qty 1

Nut 66529

Item # 4	Qty 1

Beam, Souriau 70779

Item # 5	Qty 1

Pad Clamp 70775

Item # 6	Qty 1

Coupling, Y Axis 66535

Item # 7	Qty 1

Power Cable (115V) 68209

Item # 8	Qty 1

Male Crosspin Knob
M10-45 73158

No Photo

TEMPLATE GAUGE

Template gauge for setting the stick height (see page 13).

Template gauge with 4 height settings indicated in millimeters and inches.

Removing wire feed tip using hex in template gauge.

MASTER POWER SWITCH 2009 OR EARLIER

Master Power Switch Off

Master Power Switch On, this picture indicates the fan is on but the outside ambient temperature is below -10°C/14°F, allow the unit to warm-up until the left power light comes on indicating the unit is safe to use. Do not operate the unit when the left power light is off with the power switch turned on.

Master Power Switch and Fan On.

STANLEY

MASTER POWER SWITCH 2010 OR LATER

Master Switch OFF | Power is On Heater Activated | Unit On Heater Activated | Unit On Heater Off

RW30110 / RW30112 PARTS LIST & ILLUSTRATION

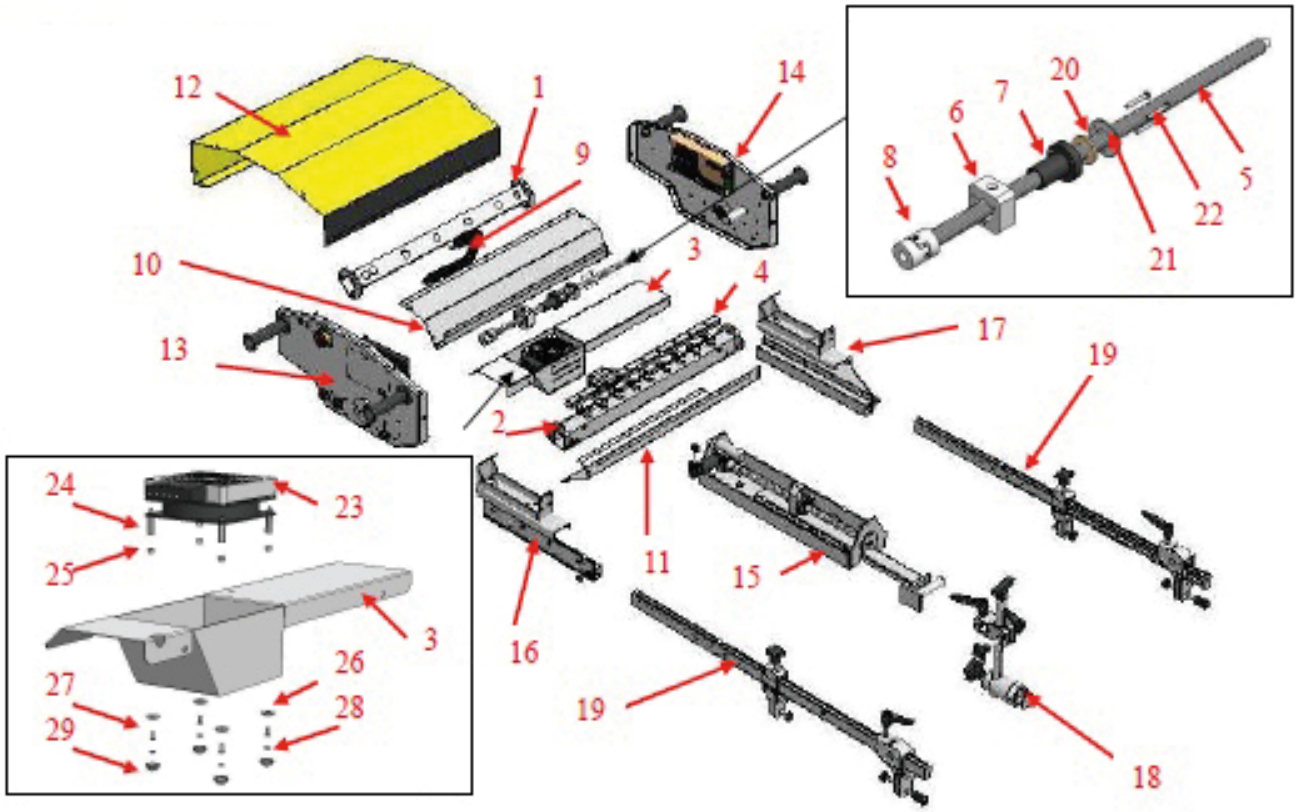

Item	Part No.	Qty	Description
1	64983	1	Rear Beam
2	64984	1	Front Beam
3	71473	1	Ventilation Box
4	66530	1	X-Axis Slide
5	66526	1	X-Axis Screw
6	---	--	---
7	66529	1	Nut
8	66535	1	Coupling Y-Axis
9	66536	1	Chain Conduit
9A	66537	1	Clamp for Chain Conduite (not show)
10	70718	1	Back Cover
11	70717	1	Front Cover

Item	Part No.	Qty	Description
12	64988	1	Cover
13	69818	1	Left Side Assembly
14	69819	1	Right Side Assembly
15	69816	1	Support Platform Assembly
16	66543	1	Left Support
17	66542	1	Right Support
18	69815	1	Torch Support Assembly
19	66546	2	Frog clamp Assy
20	-----	--	---------
21	-----	--	---------
22	-----	--	---------
23	70719	1	Heater Element
24	-----	--	---------
25	-----	--	---------
26	-----	--	---------
27	-----	--	---------
28	-----	--	---------
29	-----	--	---------

STANLEY

RW30120 PARTS LIST & ILLUSTRATION

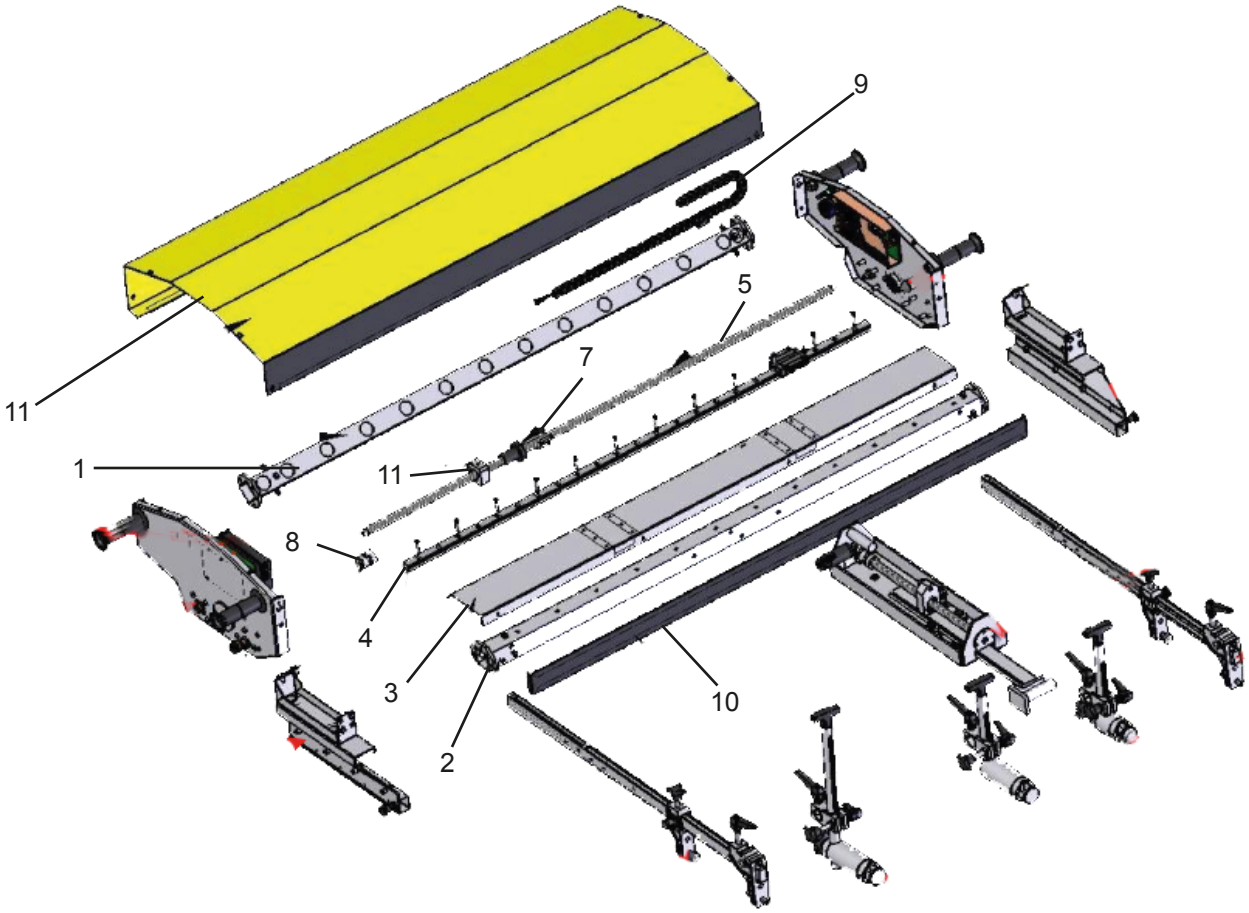

Item	Part No.	Qty	Description
1	66515	1	Rear Beam
2	66519	1	Front Beam
3	66517	1	Protection Plate
4	66531	1	X-Axis Slide
5	66528	1	X-Axis Screw
6	---	--	---
7	66529	1	Nut
8	66535	1	Coupling Y-Axis
9	66536	1	Chain Conduit
10	66537	1	Clamp for Chain Conduite (not show)
11	66554	1	Hood 1252

RW30110 / RW30112 / RW30120 LEFT SIDE ILLUSTRATION

Left Side Assembly
Part No. 69818

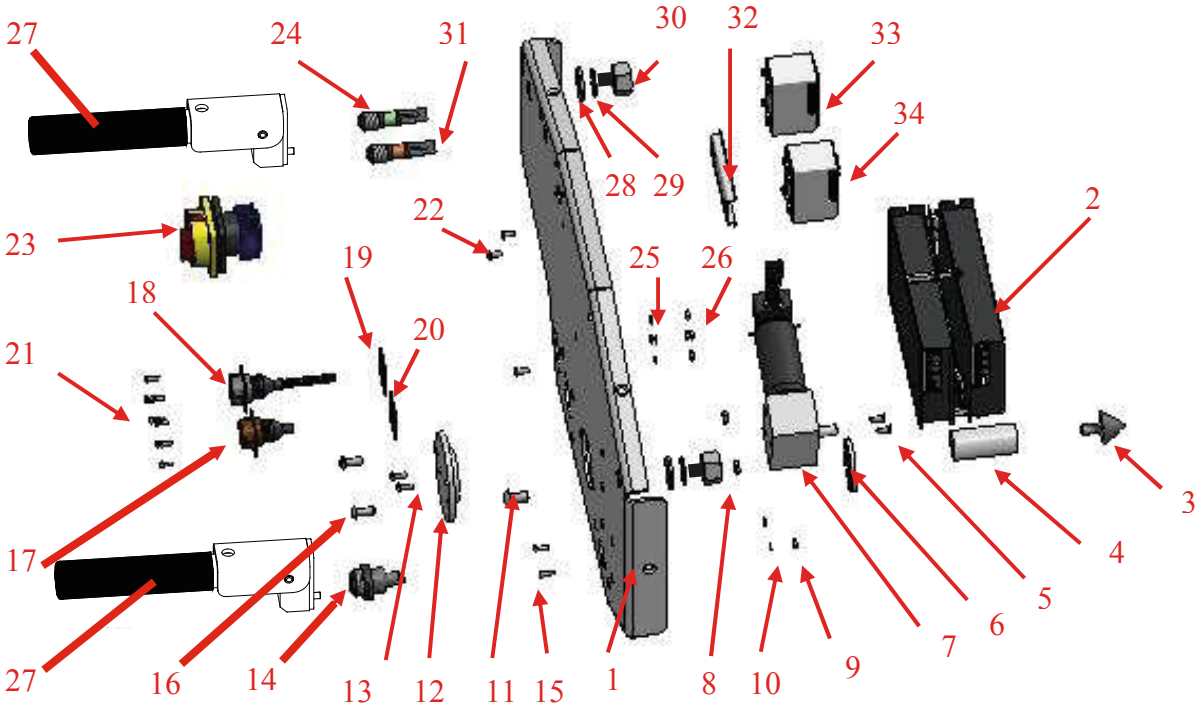

Item	Part No.	Qty	Description
1	66524	1	Left Side Plate (Motor)
2	69817	1	Motor Card Module
3	64945	1	Conical Stop
4			
5			
6	64959	1	Bearing Flange
7	64963	1	Motor X Axis
8			
9			
10			
11			
12	64957	1	Motor Support
13			
14			
15			

Item	Part No.	Qty	Description
16			
17	69826	1	Charlie box take off
18			
19			
20			
21			
22			
23	69831	1	Power On/Off Switch
24			
25			
26			
27	72593	2	Carry Handle Assy (Fold Down)
28			
29			
30			
31			
32			
33	70720	1	Thermostat (Red)
34	71000	1	Thermostat (Blue)

STANLEY

RW30110 / RW30112 / RW30120 RIGHT SIDE ILLUSTRATION

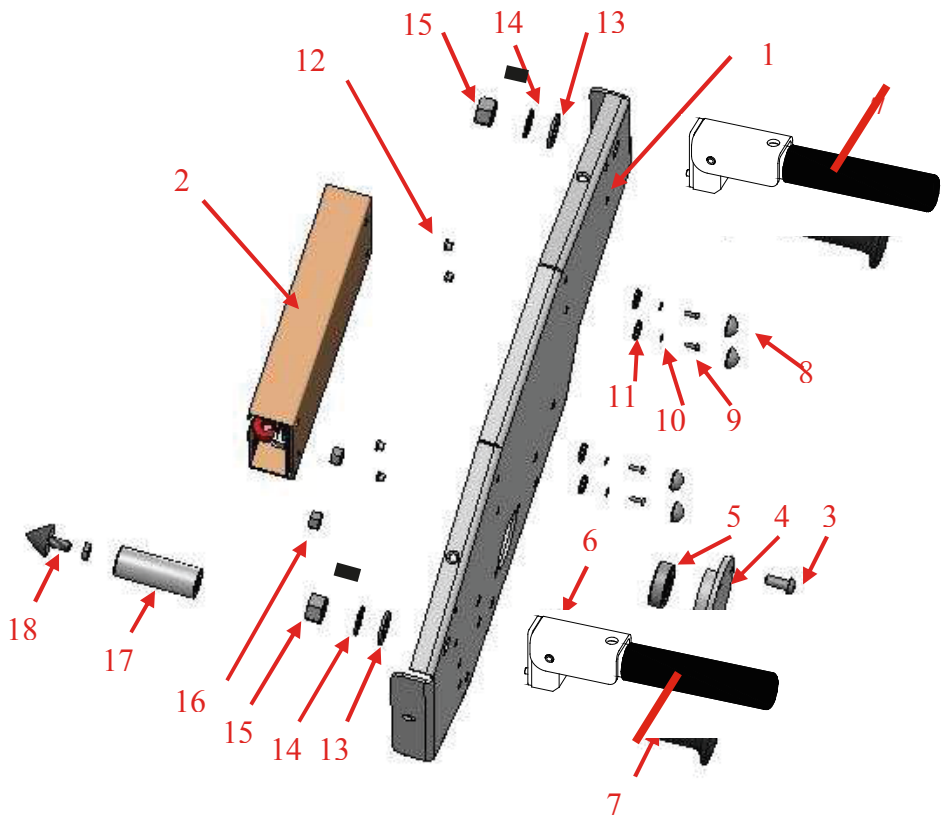

Right Side Assembly
Part No. 69819

Item	Part No.	Qty	Description
1	66525	1	Right Side Plate
2	69830	1	Power Supply
3			
4	64956	1	Bearing Support
5	64955	1	Bearing
6			
7	72593	2	Carry Handle Assy (Fold Down)
8			
9			
10			
11			
12			
13			
14			
15			
16			
17			
18	64945	1	Conical Stop

RW30110 / RW30112 / RW30120 MOTOR BOARD

Motor Board Assembly
Part No. 69817

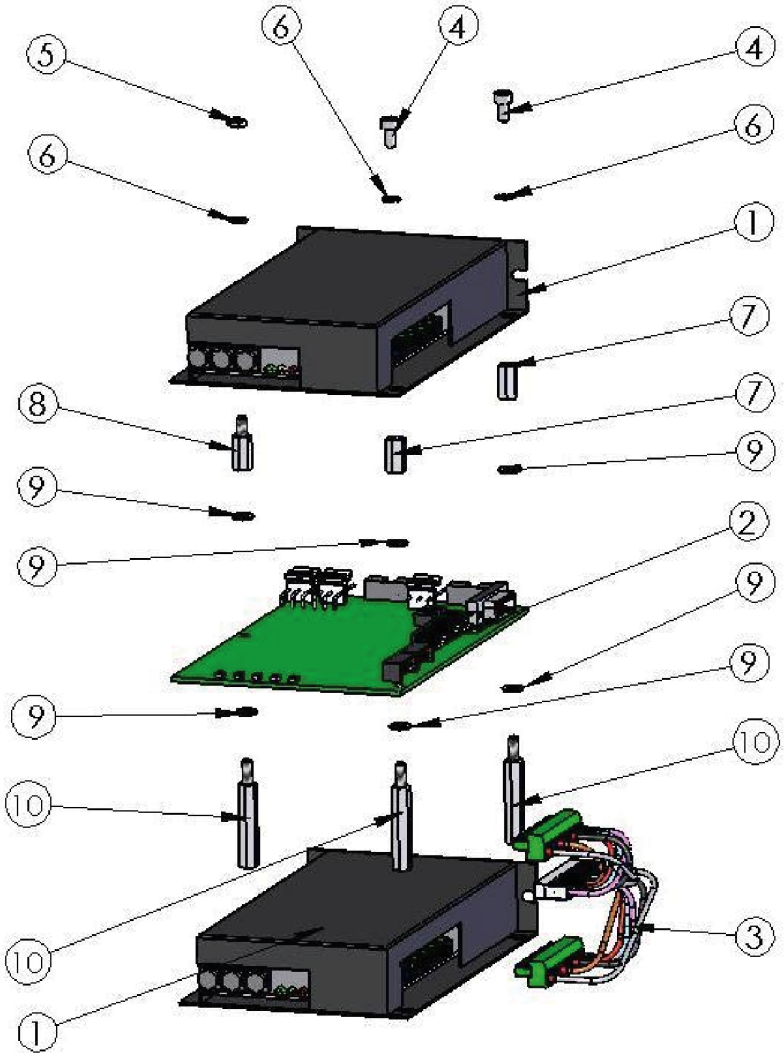

Item	Part No.	Qty	Description
1	64961	2	Motor Board
2	64969	1	Interconnection Board

STANLEY

RW30110 / RW30112 / RW30120 SUPPORT PLATFORM

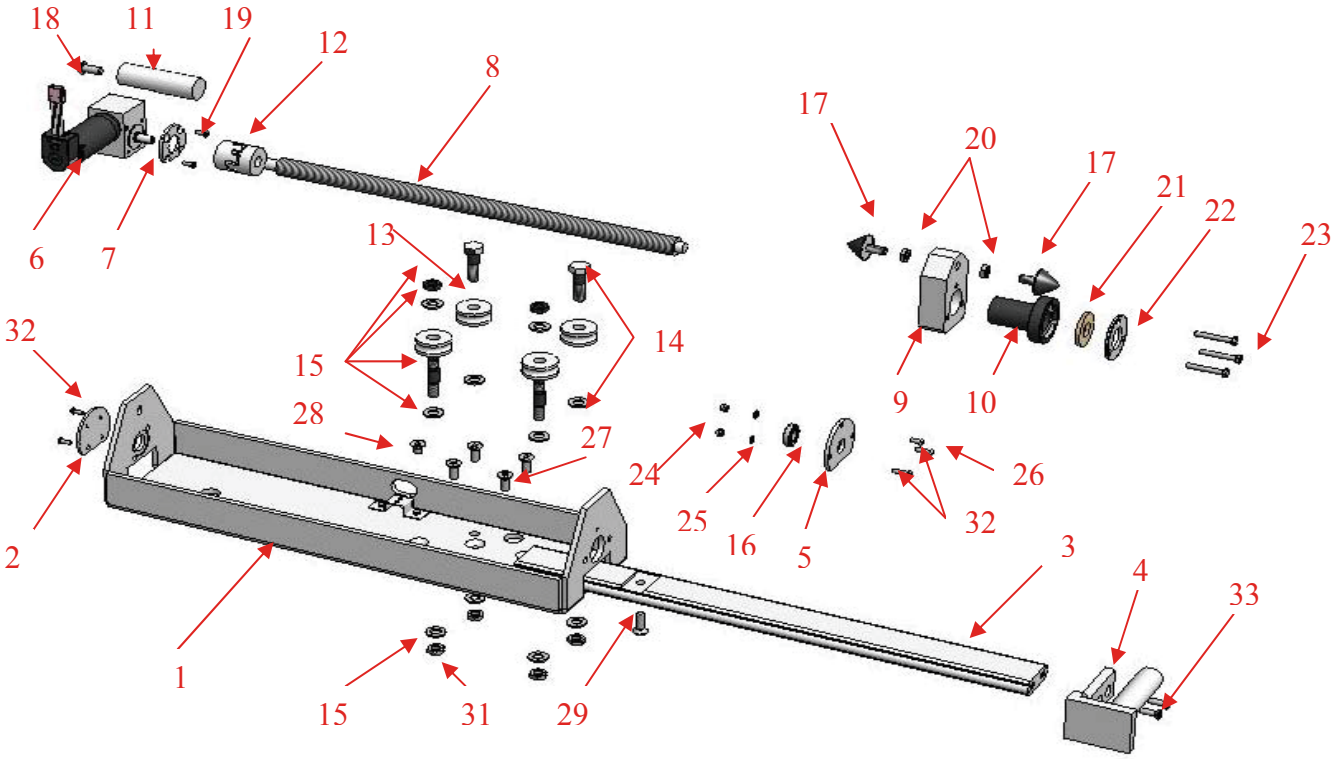

Support Platform Assembly
Part No. 69816

Item	Part No.	Qty	Description
1	64986	1	Support Platform
2	---	--	----
3	64985	1	Y-Rail
4	66549	1	Jointed Wrist Bracket
5	66532	1	Bearing Support
6	64962	1	Y-Axis Motor
7	64959	1	Bearing Flange
8	66534	1	Y-Axis Screw
9	64958	1	Axis Bracket
10	66529	1	Nut
11	66538	1	Y-Bump Stop
12	66535	1	Coupling Y-Axis
13	64948	4	Steel Roller
14	64949	2	Axle
15	64950	2	Ecentric Axle
16	66533	1	Bearing
17	64945	2	Conical Stop
33	69834	2	Screw FHC

RW30110 / RW30112 / RW30120 SUPPORT ASSEMBLY

Right Support Assembly
Part No. 66542

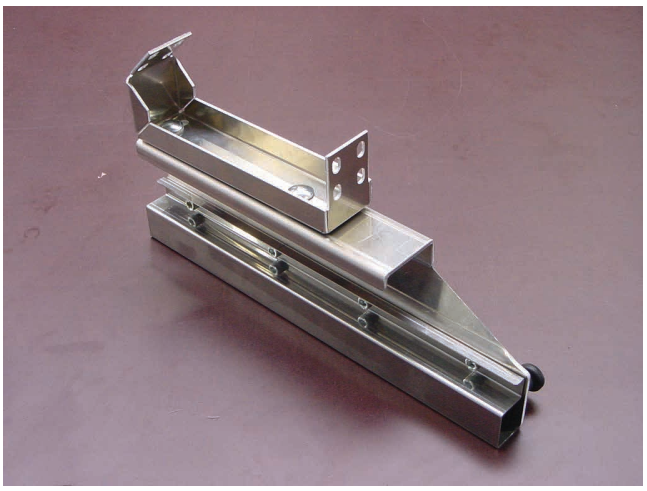

Left Support Assembly
Part No. 66543

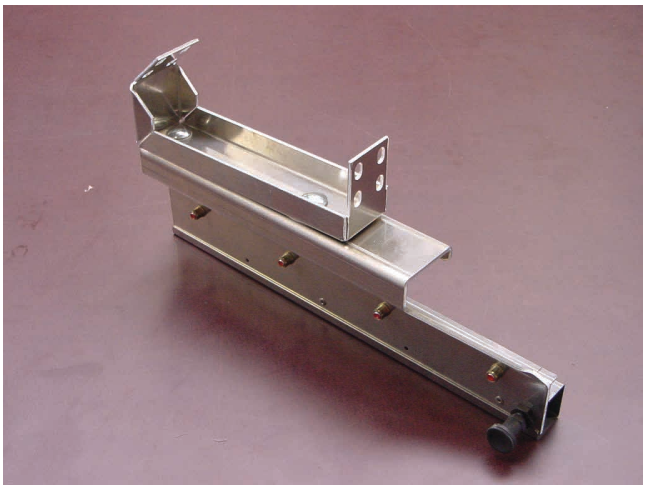

Charlie Heater
Part No. 70722

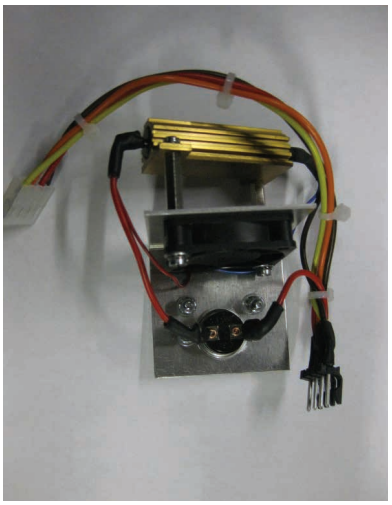

Charlie Control Box
Part No. 65446

STANLEY

CLAMP ASSEMBLY

Frog Clamp Assembly
Part No. 66546

Item # 1	Qty 1

Item # 2	Qty 1

Right Fixed Clamp
Part No. 66547

Item # 3	Qty 1

Left Pivot Clamp
Part No. 66548

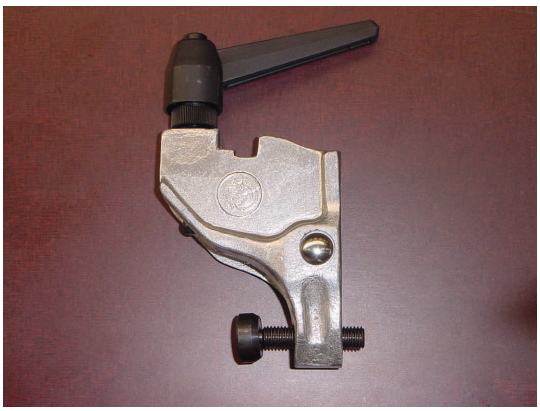

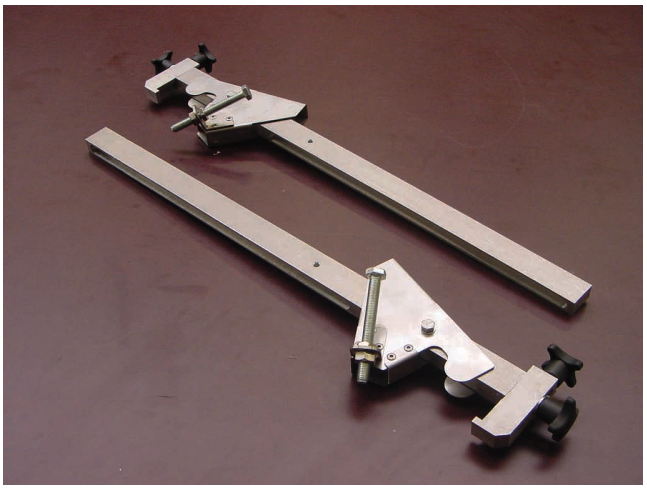

Item # 4	Qty 1

Right Self Alignment Clamp
Part No. 66544

Item # 5	Qty 1

Left Self Alignment Clamp
Part No. 66545

TORCH SUPPORT PARTS LIST & ILLUSTRATION

Torch Support Assembly
Part No. 69815

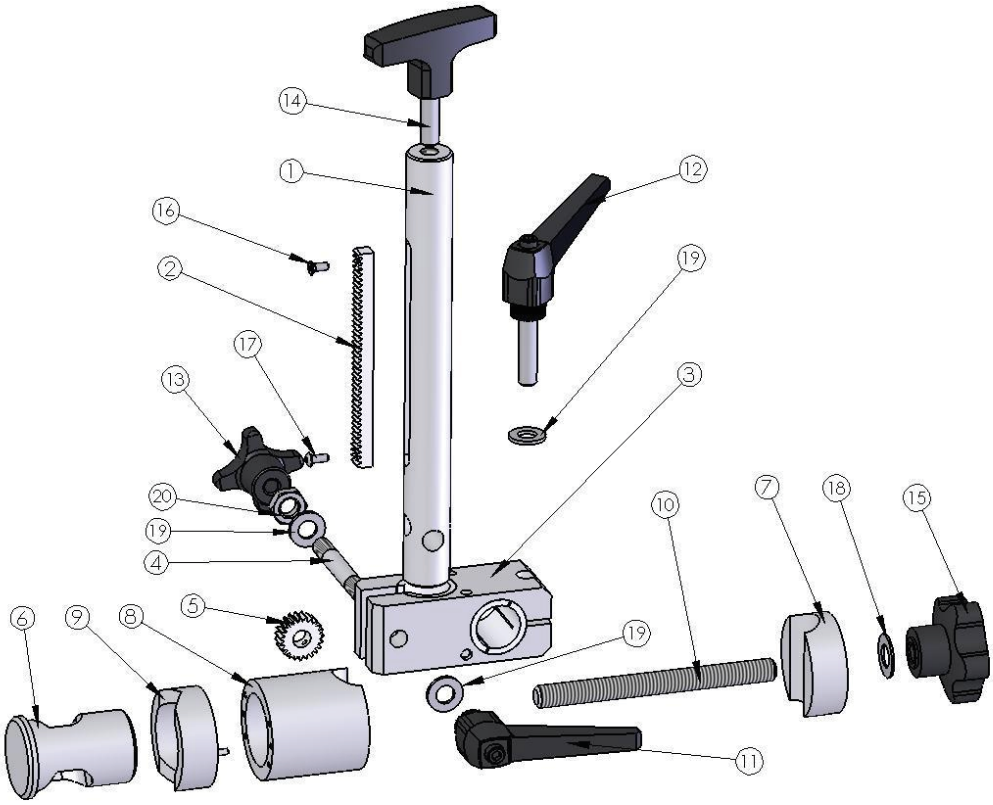

Pinion - Rack

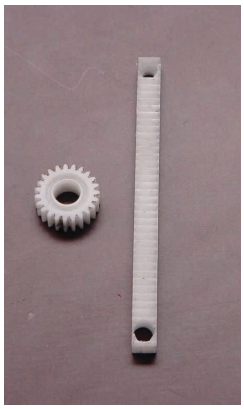

Torch Clamp

Jointed Wrist Assy

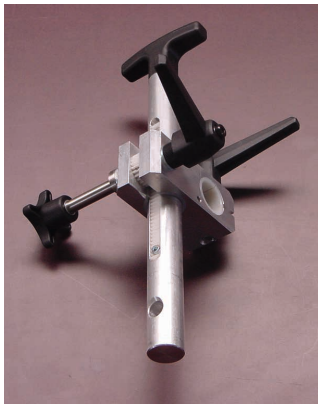

Item	Part No.	Qty	Description
1	66551	1	Pinion - Rack (Includes 2, 5)
2	66552	1	Torch Clamp (Includes 6-10, 15, 18)
3	66550	1	Jointed Wrist Assy (Includes 1-5, 11-14, 16, 17, 19, 20)

STANLEY

TORCH SUPPORT (PULL GUN) ILLUSTRATION

Item # 1	Qty 1

Torch Support Pull Gun
Part No. 69837

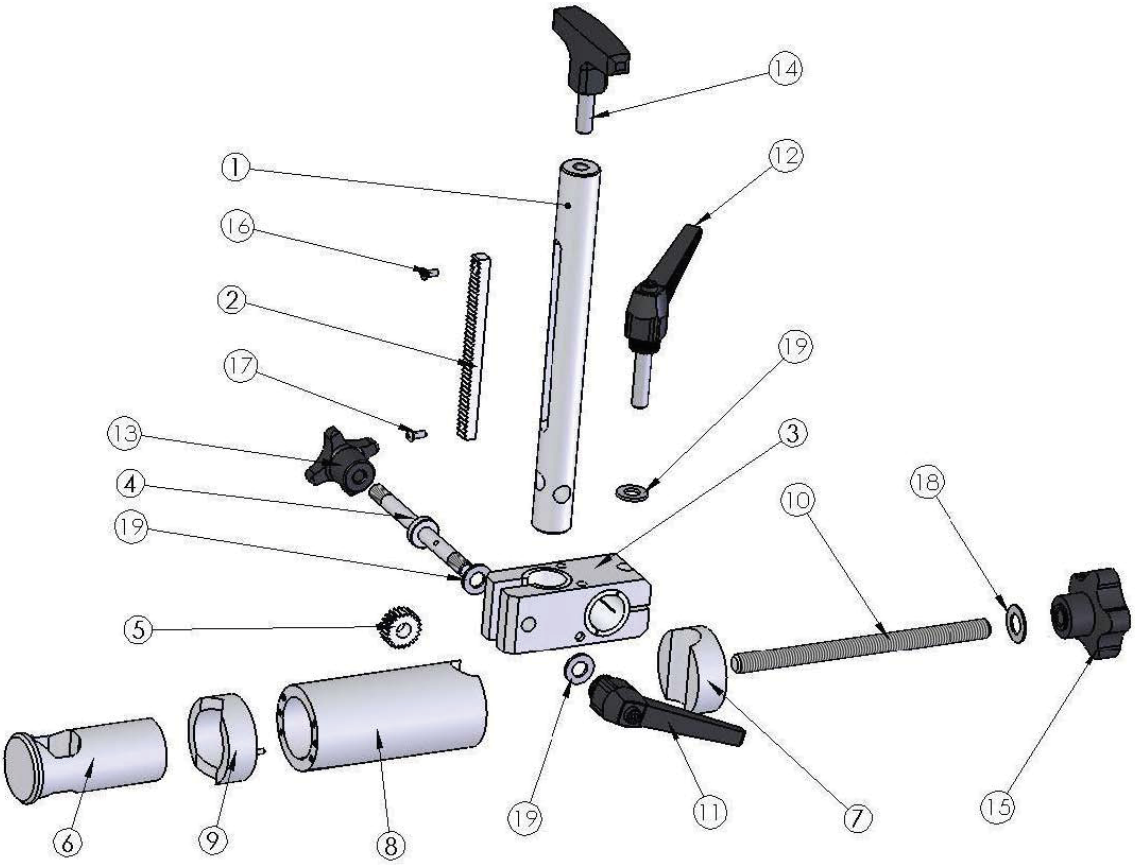

STANLEY®

STANLEY Infrastructure
6430 SE Lake Road
Portland, Oregon 97222 USA
(503) 659-5660 / Fax (503) 652-1780
www.stanleyinfrastructure.com