STANLEY®

CD10
HYDRAULIC
CORE DRILL

USER MANUAL
Safety, Operation and Maintenance

© 2014 STANLEY Black & Decker, Inc.
New Britain, CT 06053
U.S.A.
58858 8/2018 Ver. 13

DECLARATION OF CONFORMITY

DECLARATION OF CONFORMITY
ÜBEREINSTIMMUNGS-ERKLARUNG
DECLARATION DE CONFORMITE CEE
DECLARACION DE CONFORMIDAD
DICHIARAZIONE DI CONFORMITA

STANLEY

CE

I, the undersigned:
Ich, der Unterzeichnende:
Je soussigné:
El abajo firmante:
lo sottoscritto:

Weisbeck, Andy

Surname and First names/Familiennname und Vornamen/Nom et prénom/Nombre y apellido/Cognome e nome

hereby declare that the equipment specified hereunder:
bestätige hiermit, daß erklaren Produkt genannten Werk oder Gerät:
déclare que l'équipement visé ci-dessous:
Por la presente declaro que el equipo se especifica a continuación:
Dichiaro che le apparecchiature specificate di seguito:

1. Category:
   Kategorie:
   Catégorie:
   Categoria:
   Categoria: **Core Drill, Hydraulic**
2. Make/Marke/Marque/Marca/Marca **STANLEY**
3. Type/Typ/Type/Tipo/Tipo: **CD10100**
4. Serial number of equipment:
   Seriennummer des Geräts:
   Numéro de série de l'équipement:
   Numero de serie del equipo:
   Matricola dell´attrezzatura: **All**

Has been manufactured in conformity with
Wurde hergestellt in Übereinstimmung mit
Est fabriqué conformément
Ha sido fabricado de acuerdo con
E' stata costruita in conformitá con

Directive/Standards Richtlinie/Standards Directives/Normes Directriz/Los Normas Direttiva/Norme	No. Nr Numéro No n.	Approved body Prüfung durch Organisme agréé Aprobado Collaudato
ISO ISO Machinery Directive	12100:2010 20643:2005 2006/42/EC:2006	Spitznas Spitznas Spitznas

5. Special Provisions: **None**
   Spezielle Bestimmungen:
   Dispositions particulières:
   Provisiones especiales:
   Disposizioni speciali:

6. Representative in the Union: **Patrick Vervier**, **Stanley Dubuis 17-19, rue Jules Berthonneau-BP 3406 41034 Blois Cedex, France.**
   Vertreter in der Union/Représentant dans l'union/Representante en la Union/Rappresentante presso l'Unione

Done at/Ort/Fait à/Dado en/Fatto a STANLEY Infrastructure, Portland, Oregon USA Date/Datum/le/Fecha/Data 1-27-11

Signature/Unterschrift/Signature/Firma/Firma Andy Weisbeck

Position/Position/Fonction/Cargo/Posizione Director of Product Development

STANLEY

TABLE OF CONTENTS

SAFETY SYMBOLS....4
SAFETY PRECAUTIONS....5
TOOL STICKERS & TAGS....6
HOSE TYPES....7
HOSE RECOMMENDATIONS....8
HTMA / EHTMA REQUIREMENTS....9
OPERATION....10
TOOL PROTECTION & CARE....12
TROUBLESHOOTING....13
SPECIFICATIONS....15
ACCESSORIES....15
CD10 PARTS ILLUSTRATION....16
CD10 PARTS LIST....17

IMPORTANT

To fill out a product warranty validation form, and for information on your warranty, visit www.stanleyinfrastructure.com and select the Company tab > Warranty.

Note: The warranty validation record must be submitted to validate the warranty.

SERVICING: This manual contains safety, operation and routine maintenance instructions. STANLEY Infrastructure recommends that servicing of hydraulic tools, other than routine maintenance, must be performed by an authorized and certified dealer. Please read the following warning.

⚠WARNING

SERIOUS INJURY OR DEATH COULD RESULT FROM THE IMPROPER REPAIR OR SERVICE OF THIS TOOL.

REPAIRS AND / OR SERVICE TO THIS TOOL MUST ONLY BE DONE BY AN AUTHORIZED AND CERTIFIED DEALER.

For the nearest certified dealer, call STANLEY Infrastructure at (503) 659-5660 and ask for a Customer Service Representative.

SAFETY SYMBOLS

Safety symbols and signal words, as shown below, are used to emphasize all operator, maintenance and repair actions which, if not strictly followed, could result in a life-threatening situation, bodily injury or damage to equipment.

This is the safety alert symbol. It is used to alert you to potential personal injury hazards. Obey all safety messages that follow this symbol to avoid possible injury or death.

DANGER — This safety alert and signal word indicates an imminently hazardous situation which, if not avoided, will result in death or serious injury.

WARNING — This safety alert and signal word indicates a potentially hazardous situation which, if not avoided, could result in death or serious injury.

CAUTION — This safety alert and signal word indicates a potentially hazardous situation which, if not avoided, could result in death or serious injury.

CAUTION — This signal word indicates a potentially hazardous situation which, if not avoided, may result in property damage.

NOTICE — This signal word indicates a situation which, if not avoided, will result in damage to the equipment.

IMPORTANT — This signal word indicates a situation which, if not avoided, may result in damage to the equipment.

Always observe safety symbols. They are included for your safety and for the protection of the tool.

LOCAL SAFETY REGULATIONS

Enter any local safety regulations here. Keep these instructions in an area accessible to the operator and maintenance personnel.

STANLEY

SAFETY PRECAUTIONS

Tool operators and maintenance personnel must always comply with the safety precautions given in this manual, and on the stickers and tags attached to or on the tool and hose(s).

These safety precautions are for your safety. Review them carefully before operating the tool or performing any maintenance or repairs.

Supervising personnel may specify additional precautions for your work area to comply with company policies and local safety regulations. Enter any added precautions in the space provided in this manual.

The CD10 Hydraulic Core Drill will provide safe and dependable service if operated in accordance with the instructions given in this manual. Read and understand this manual and any stickers and tags attached to the tool and hoses before operation. Failure to do so could result in personal injury or equipment damage.

- Operator must start in a work area without bystanders. The operator must be familiar with all prohibited work areas such as excessive slopes and dangerous terrain conditions.
- Establish a training program for all operators to ensure safe operation.
- Do not operate the tool unless thoroughly trained or under the supervision of an instructor.
- Always wear safety equipment such as goggles, head protection and safety shoes at all times when operating the tool.
- Do not inspect or clean the tool while the hydraulic power source is connected. Accidental engagement of the tool can cause serious injury.
- Do not operate this tool without first reading the operating instructions.
- Never operate the tool if you are not sure if underground utilities are present. Underground electrical utilities present an electrocution hazard. Underground gas utilities present an explosion hazard. Other underground utilities may present other hazards.
- Do not wear loose fitting clothing when operating the tool. Loose fitting clothing can become entangled with the tool and cause serious injury.
- Hydraulic supply hoses must have a minimum working pressure rating of 2500 psi/175 bar.
- Ensure all hose connections are tight.
- The hydraulic circuit control valve must be in the **OFF** position when coupling or uncoupling the tool. Wipe all couplers clean before connecting. Failure to do so may result in damage to the quick couplers and cause overheating. Use only lint-free cloths.
- Do not operate the tool at oil temperatures above 140 °F/60 °C. Operation at higher oil temperatures can cause operator discomfort and may damage the tool.
- Do not operate a damaged, improperly adjusted or incompletely assembled tool.
- To avoid personal injury or equipment damage, all tool repair, maintenance and service must only be performed by authorized and properly trained personnel.
- Do not exceed the rated limits of the tool or use the tool for applications beyond its design capacity.
- Always keep critical tool markings, such as labels and warning stickers, legible.
- Always replace parts with replacement parts recommended by STANLEY.
- Check fastener tightness daily, before each use
- **WARNING:** Some dust created by power sanding, sawing, grinding, drilling, and other construction activities contains chemicals known to the State of California to cause cancer, birth defects or other reproductive harm. Some examples of these chemicals are:
    - Lead from lead-based paints,
    - crystalline silica from bricks and cement and other masonry products, and
    - arsenic and chromium from chemically-treated lumber.

Your risk from these exposures varies, depending on how often you do this type of work. To reduce your exposure to these chemicals: work in a well ventilated area, and work with approved safety equipment, such as those dust masks that are specially designed to filter out microscopic particles.

Protect yourself and those around you. Research and understand the materials you are cutting. Follow correct safety procedures and comply with all applicable national, state or provisional health and safety regulations relating to them, including, if appropriate arranging for the safe disposal of the materials by a qualified person.

TOOL STICKERS & TAGS

Circuit Type C Sticker
11206

Circuit Type D Sticker
11207

CE Sticker
28322

28409
Composite Sticker

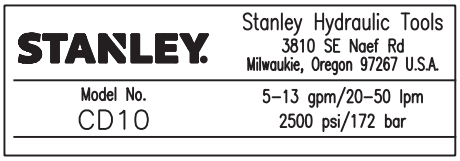

76482
Name Tag Sticker

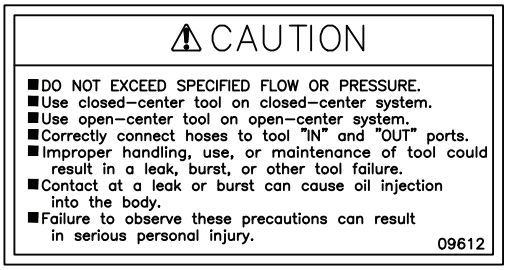

09612
Caution Sticker

NOTE:

THE INFORMATION LISTED ON THE STICKERS SHOWN, MUST BE LEGIBLE AT ALL TIMES.

REPLACE DECALS IF THEY BECOME WORN OR DAMAGED. REPLACEMENTS ARE AVAILABLE FROM YOUR LOCAL STANLEY DISTRIBUTOR.

The safety tag (P/N 15875) at right is attached to the tool when shipped from the factory. Read and understand the safety instructions listed on this tag before removal. We suggest you retain this tag and attach it to the tool when not in use.

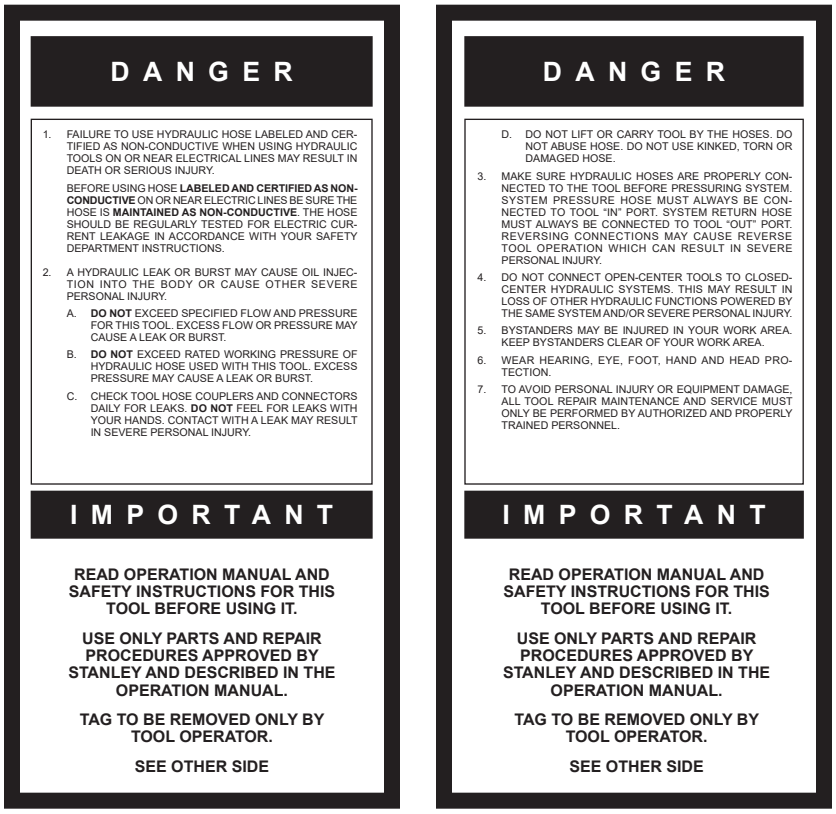

SAFETY TAG P/N 15875 (Shown smaller then actual size)

HOSE TYPES

The rated working pressure of the hydraulic hose must be equal to or higher than the relief valve setting on the hydraulic system. There are three types of hydraulic hose that meet this requirement and are authorized for use with STANLEY hydraulic tools. They are:

Certified non-conductive — constructed of thermoplastic or synthetic rubber inner tube, synthetic fiber braid reinforcement, and weather resistant thermoplastic or synthetic rubber cover. *Hose labeled **certified non-conductive** is the only hose authorized for use near electrical conductors.*

Wire-braided (conductive) — constructed of synthetic rubber inner tube, single or double wire braid reinforcement, and weather resistant synthetic rubber cover. *This hose is **conductive** and must never be used near electrical conductors.*

Fabric-braided (not certified or labeled non-conductive) — constructed of thermoplastic or synthetic rubber inner tube, synthetic fiber braid reinforcement, and weather resistant thermoplastic or synthetic rubber cover. *This hose is **not certified non-conductive** and must never be used near electrical conductors.*

HOSE SAFETY TAGS

To help ensure your safety, the following DANGER tags are attached to all hose purchased from STANLEY. DO NOT REMOVE THESE TAGS.

If the information on a tag is illegible because of wear or damage, replace the tag immediately. A new tag may be obtained from your STANLEY Distributor.

THE TAG SHOWN BELOW IS ATTACHED TO "CERTIFIED NON-CONDUCTIVE" HOSE

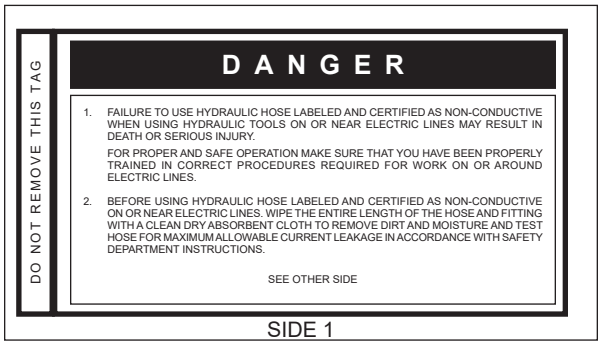

SIDE 1

SIDE 2

(Shown smaller than actual size)

THE TAG SHOWN BELOW IS ATTACHED TO "CONDUCTIVE" HOSE.

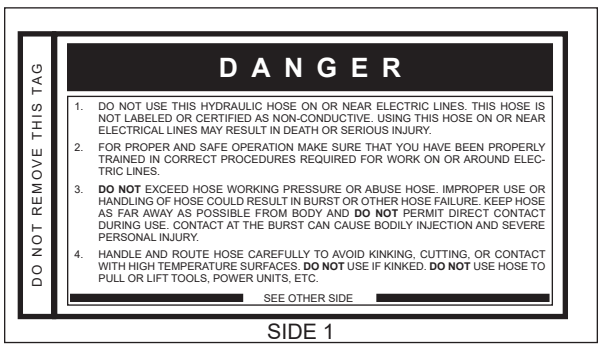

SIDE 1

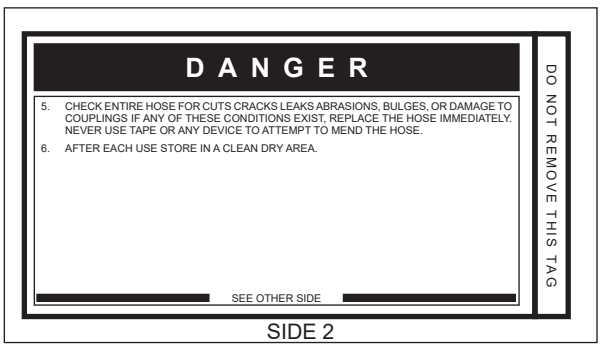

SIDE 2

(Shown smaller than actual size)

Tool to Hydraulic Circuit Hose Recommendations

The chart to the right shows recommended minimum hose diameters for various hose lengths based on gallons per minute (GPM)/liters per minute (LPM). These recommendations are intended to keep return line pressure (back pressure) to a minimum acceptable level to ensure maximum tool performance.

This chart is intended to be used for hydraulic tool applications only based on STANLEY tool operating requirements and should not be used for any other applications.

All hydraulic hose must have at least a rated minimum working pressure equal to the maximum hydraulic system relief valve setting.

All hydraulic hose must meet or exceed specifications as set forth by SAE J517.

Oil Flow		Hose Lengths		Inside Diameter		USE (Press/Return)	Min. Working Pressure	
GPM	LPM	FEET	METERS	INCH	MM		PSI	BAR
Certified Non-Conductive Hose - Fiber Braid - for Utility Bucket Trucks								
4-9	15-34	up to 10	up to 3	3/8	10	Both	2250	155
Conductive Hose - Wire Braid or Fiber Braid -DO NOT USE NEAR ELECTRICAL CONDUCTORS								
4-6	15-23	up to 25	up to 7.5	3/8	10	Both	2500	175
4-6	15-23	26-100	7.5-30	1/2	13	Both	2500	175
5-10.5	19-40	up to 50	up to 15	1/2	13	Both	2500	175
5-10.5	19-40	51-100	15-30	5/8	16	Both	2500	175
5-10.5	19-40	100-300	30-90	5/8	16	Pressure	2500	175
				3/4	19	Return	2500	175
10-13	38-49	up to 50	up to 15	5/8	16	Both	2500	175
10-13	38-49	51-100	15-30	5/8	16	Pressure	2500	175
				3/4	19	Return	2500	175
10-13	38-49	100-200	30-60	3/4	19	Pressure	2500	175
				1	25.4	Return	2500	175
13-16	49-60	up to 25	up to 8	5/8	16	Pressure	2500	175
				3/4	19	Return	2500	175
13-16	49-60	26-100	8-30	3/4	19	Pressure	2500	175
				1	25.4	Return	2500	175

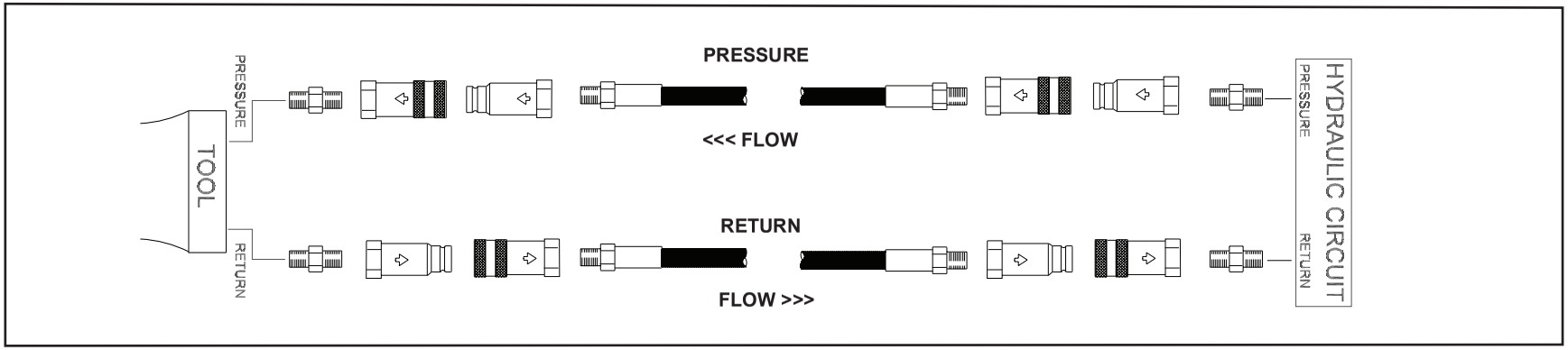

Figure 1. Typical Hose Connections

HTMA / EHTMA REQUIREMENTS

HTMA HYDRAULIC SYSTEM REQUIREMENTS	TOOL TYPE: TYPE I	TYPE II	TYPE RR	TYPE III
Flow range	4-6 GPM (15-23 LPM)	7-9 GPM (26-34 LPM)	9-10.5 GPM (34-40 LPM)	11-13 GPM (42-49 LPM)
Nominal operating pressure (At the power supply outlet)	1500 psi (103 bar)	1500 psi (103 bar)	1500 psi (103 bar)	1500 psi (103 bar)
System relief valve setting (At the power supply outlet)	2100-2250 psi (145-155 bar)	2100-2250 psi (145-155 bar)	2200-2300 psi (152-159 bar)	2100-2250 psi (145-155 bar)
Maximum back pressure (At tool end of the return hose)	250 psi (17 bar)	250 psi (17 bar)	250 psi (17 bar)	250 psi (17 bar)
Measured at a max fluid viscosity of: (At minimum operating temperature)	400 ssu* (82 centistokes)	400 ssu* (82 centistokes)	400 ssu* (82 centistokes)	400 ssu* (82 centistokes)
Temperature: Sufficient heat rejection capacity to limit maximum fluid temperature to: (At maximum expected ambient temperature)	140° F (60° C)	140° F (60° C)	140° F (60° C)	140° F (60° C)
Minimum cooling capacity at a temperature difference of between ambient and fluid temps	3 hp (2.24 kW) 40° F (22° C)	5 hp (3.73 kW) 40° F (22° C)	6 hp (5.22 kW) 40° F (22° C)	7 hp (4.47 kW) 40° F (22° C)
Note: Do not operate the tool at oil temperatures above 140° F (60° C). Operation at higher temperatures can cause operator discomfort at the tool.				
Filter minimum full-flow filtration	25 microns	25 microns	25 microns	25 microns
Sized for flow of at least: (For cold temp startup and maximum dirt-holding capacity)	30 GPM (114 LPM)	30 GPM (114 LPM)	30 GPM (114 LPM)	30 GPM (114 LPM)
Hydraulic fluid, petroleum based (premium grade, anti-wear, non-conductive) Viscosity (at minimum and maximum operating temps)	100-400 ssu (20-82 centistokes)	100-400 ssu (20-82 centistokes)	100-400 ssu (20-82 centistokes)	100-400 ssu (20-82 centistokes)
Note: When choosing hydraulic fluid, the expected oil temperature extremes that will be experienced in service determine the most suitable temperature viscosity characteristics. Hydraulic fluids with a viscosity index over 140 will meet the requirements over a wide range of operating temperatures. *SSU = Saybolt Seconds Universal				

EHTMA HYDRAULIC SYSTEM REQUIREMENTS	CLASSIFICATION: 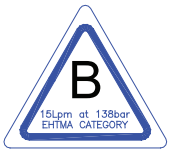				
Flow range	3.5-4.3 GPM (13.5-16.5 LPM)	4.7-5.8 GPM (18-22 LPM)	7.1-8.7 GPM (27-33 LPM)	9.5-11.6 GPM (36-44 LPM)	11.8-14.5 GPM (45-55 LPM)
Nominal operating pressure (At the power supply outlet)	1870 psi (129 bar)	1500 psi (103 bar)	1500 psi (103 bar)	1500 psi (103 bar)	1500 psi (103 bar)
System relief valve setting (At the power supply outlet)	2495 psi (172 bar)	2000 psi (138 bar)	2000 psi (138 bar)	2000 psi (138 bar)	2000 psi (138 bar)

Note: These are general hydraulic system requirements. See tool specification page for tool specific requirements.

OPERATION

GENERAL OPERATION

Tools included for mounting and dismounting:

- Single-head wrench SW 24
- Single-head wrench SW 32
- Single-head wrench SW 41
- Hex wrench SW 5

DRILL BIT INSTALLATION

⚠WARNING

Ensure that the tool is disconnected from the power source to avoid unintentional operation of the tool and injury. Disconnect only depressurized hoses.

Use a single-head wrench (SW 24 or SW 41) and a single-head wrench (SW 32) to unscrew and replace the drill bit.

DIMENSION OF THE DRILL BIT

Drill head thread: male 1 – 1/4 in. UNC and female R 1/2 in.

Which drill bit at which speed?

	Gear #1	Gear #2	Gear #3
Speed (1/min)	380	900	1800
Drill bit dia. (mm)	100–162	40–100	20–40
Cutting speed (m/s)	2–3, 5	2–4, 5	2–4

CHECK THE POWER SOURCE

1. Using a calibrated flowmeter and pressure gauge, check that the hydraulic power source develops a flow of 5.8–13.2 GPM / 22–50 LPM at 950–2000 psi/66-140 bar.
2. Ensure the hydraulic power source is equipped with a relief valve set to open at 2100–2250 psi/145–155 bar.
3. Check that the hydraulic circuit matches the tool for open-center (OC) operation.

CHECK THE TOOL

1. Ensure all tool accessories are correctly installed. Failure to install tool accessories properly can result in damage to the tool or personal injury.
2. There should be no signs of leaks.
3. The tool should be clean and dry with all fittings and fasteners tight.

CONNECT HOSES

1. Wipe all hose couplers with a clean lint-free cloth, before making connections.
2. Connect the hoses from the hydraulic power source to the tool fittings or quick disconnects. Connect the return hose first and disconnect it last to eliminate trapped pressure.

Note: If uncoupled hoses are left in the sun, pressure increase within the hose can make them difficult to connect. Connect the free ends of hoses together when not in use.

3. Observe the flow indicators stamped on the hose couplers to ensure that the flow is in the proper direction. The female coupler on the tool's IN port is the inlet coupler.
4. Squeeze the drill trigger momentarily. If the drill does not operate, the hoses may be reversed. Verify correct connection of the hoses before continuing.

FREEHAND DRILLING

1. Observe all safety precautions.
2. Mount the spot-drilling aid onto the centering collar to ensure precise positioning.
3. Screw on the desired drill bit (up to max. Ø 80 mm approximately 3 inches). Refer to "Drill Bit Installation" on page 10. Manual tightening is sufficient as the drill bit will automatically fasten further during drilling.
4. Connect CD10 to a water supply. For this purpose, the device comes with a 10 liter pump barrel, which must be pressurized. Alternatively, you may connect the device to a water tap, using a "Garden" hose couplings. Maximum water pressure is 60 psi/4 bar.
5. Connect the tool to the power source.
6. Move the hydraulic circuit control valve to the "ON" position.
7. Regulate the water valve to adjust the water supply flow as desired.
8. Proceed to carry out your work.

⚠CAUTION

Never switch into gear #1 in freehand drilling operation. This delivers the highest torque.

9. Place CD10 in drilling position and squeeze the trigger to activate the drill.

⚠WARNING

To avoid injury, do not use the valve trigger lock in freehand drilling operation! Use valve trigger lock in stand-aided drilling operation only!

10. Release the trigger to stop the drill.

Note: The handle and the spot-drilling aid enable controlled manual operation of the drill.

⚠ CAUTION

Monitor the water supply to ensure that sufficient water is supplied to the cut surface to avoid unnecessary wear of drilling equipment.

11. Dismount the drill upon completion of drilling work.

STAND-AIDED DRILLING

Anchor the stand at the point where you wish to drill. To do so, drill a hole matching the size of the corresponding screw anchor and screw the stand onto the surface. Align the stand such that the drill bit will make contact with the surface precisely at the point where you want to drill the opening or hole.

1. Insert the drill from above, into the corresponding seat, and fasten the core drill using the hex head socket wrench (SW 5).
2. Manually screw the corresponding drill bit from below, onto the drill bit adapter. Manual tightening is sufficient as the drill bit will automatically fasten further during drilling operation.
3. If an angled hole is necessary, adjust the stand position by swiveling the arm of the stand.
4. Connect CD10 to a water supply. For this purpose, the device comes with a 10 liter pump barrel, which must be pressurized. Alternatively, you may connect the device to a water tap, using a “Garden” hose couplings. Maximum water pressure is 60 psi/4 bar.
5. Connect the tool to the power source.
6. Move the hydraulic circuit control valve to the “ON” position.
7. To operate the drill, regulate check valve to adjust the water supply flow as desired.
8. Proceed to carry out your work.
9. Squeeze the trigger to activate the drill.

⚠ CAUTION

Monitor the water supply to ensure that sufficient water is supplied to the cut surface to avoid unnecessary wear of drilling equipment.

10. You may continuously control the advance motion of the drill by adjusting the star knob at the side of the drilling stand.
11. To switch off the machine, unlock the valve trigger fixing key. Then shut off the water supply.
12. Dismounting the drill upon completion of drilling work.

⚠ CAUTION

When drilling into a structure that may contain electrical wiring, know the location of wiring and DO NOT drill into it. The housing can carry electrical current from live electrical wires, into which the drill is accidentally drilled resulting in injury or death.

COLD WEATHER OPERATION

If the drill is to be used during cold weather, preheat the hydraulic fluid at low engine speed. When using the normally recommended fluids, fluid temperature should be at or above 50 °F/10 °C (400 ssu/ 82 centistokes) before use. Damage to the hydraulic system or drill can result from use with fluid that is too viscous or too thick.

TOOL PROTECTION & CARE

NOTICE

In addition to the safety precautions found in this manual, observe the following for equipment protection and care.

- Make sure all couplers are wiped clean before connection.
- The hydraulic circuit control valve must be in the “OFF” position when coupling or uncoupling hydraulic tools. Failure to do so may result in damage to the quick couplers and cause overheating of the hydraulic system.
- Always store the tool in a clean dry space, safe from damage or pilferage.
- Make sure the circuit PRESSURE hose (with male quick disconnect) is connected to the “IN” port. The circuit RETURN hose (with female quick disconnect) is connected to the opposite port. Do not reverse circuit flow. This can cause damage to internal seals.
- Always replace hoses, couplings and other parts with replacement parts recommended by STANLEY. Supply hoses must have a minimum working pressure rating of 2500 psi/172 bar.
- Do not exceed the rated flow. See “SPECIFICATIONS” on page 15 for correct flow rate. Rapid failure of the internal seals may result if the flow exceeds the specified rate.
- Always keep critical tool markings, such as warning stickers and tags, legible.
- Tool repair should be performed by experienced personnel only.
- Make certain that the recommended relief valves are installed in the pressure side of the system.
- Do not use the tool for applications for which it was not intended.

TROUBLESHOOTING

If symptoms of poor performance develop, this chart can be used as a guide to correct the problem. When diagnosing faults in the tool, always check that the hydraulic power source is supplying the correct hydraulic flow and pressure to the tool as listed in the following table. Use a flow meter known to be accurate. Check the flow with the hydraulic fluid temperature at least 80 °F/27 °C.

Symptom	Possible Cause	Solution
Tool will not start.	Hydraulic power is not being supplied.	Check to make certain that both hoses are connected to the hydraulic power source.
		Turn hydraulic circuit control valve “ON”.
	Defective quick disconnect.	Check each disconnect separately. Replace as necessary.
	Jammed motor.	See your authorized dealer for service.
	Flow reversed through hoses.	Correct the hydraulic power source control valve position. Prevent reverse flow by using only one port from the valve for pressure, the return tool hose to the cooler and the filter line. Correct the quick-disconnect male/ female routing per instructions and the arrows on the fittings.
Low drilling torque.	Incorrect hydraulic flow.	Check that the hydraulic power source is producing 5.8–13 GPM /22–50 LPM at 950–2000 psi /66–140 bar.
	Defective quick disconnect.	Check each disconnect separately.
	Hydraulic circuit relief set too low, hoses too restrictive or the hydraulic fluid is too thick.	Set relief valve at 2100 psi / 145 bar.
	Fluid Restriction in hose or valve. Excess back pressure.	Locate and remove restrictions.
		Use correct fluid.
		Fluid not warmed-up. Preheat system.
		Hoses too long for hose I.D. Use shorter hose.
	Priority flow control valve is malfunctioning.	See your authorized service dealer for replacement.
	Flow reversed through hoses.	Correct the power source control valve position. Prevent reverse flow by using only one port from the valve for pressure, the return tool hose to the cooler and the filter line. Correct the quick-disconnect male/ female routing per instructions and the arrows on the fittings.
	Too low slip clutch torque.	Inspect and replace slip clutch washers if necessary. Set torque to 20±1,5 Nm, 15±1 lbf.ft. See your authorized service dealer for repair. Do not overload drill to avoid wear of slip clutch.

TROUBLESHOOTING

Symptom	Possible Cause	Solution
Tool runs too fast.	Incorrect hydraulic flow.	Check that hydraulic power source is not producing over 13.2 / 50 LPM at 950-2000 psi / 66-149 bar.
	Hydraulic flow reversed.	Correct the tool hoses, IN and OUT per instructions and if the power supply valve is reversible, reconnect the tool return hose to the oil cooler or to the filter directly.
	Priority valve faulty.	Do not separate modules. Remove inspect and replace priority valve if necessary. See your authorized service dealer for replacement.
Trigger operation erratic. Control difficult.	Trigger mechanism blocked.	Do not separate modules. Clean trigger area. Adjust trigger.
Fluid leak at air gap between motor and valve housing.	Motor capscrews loose.	Tighten to recommended torque (10 Nm = 7, 5 lbf.ft).
	Motor O-rings worn.	See your authorized dealer for repair.
	Motor cap/main housing damaged.	See your authorized dealer for repair.
	Hydraulic pressure and return hoses reversed.	Correct hose connections.
Fluid gets too hot. Power unit working hard.	Open center tool on a closed center circuit or vice versa.	Use tools to match circuit.
	Circuit relief set too low.	Adjust relief valve to 2100-22500 psi/145-155 bar.
	Too much fluid getting through tool.	Adjust flow to 13.2 GPM/50 LPM maximum.
	Circuit is generating high heat with flow controls.	Use pump size and rpm for producing needed flow only. Eliminate circuit heating causes.
	Circuit has contaminants that have caused wear and high heat generation.	Replace worn pump and valves. Install a large clean filter and keep the fluid clean.
Gearshift knob turns hard.	Oil leak at motor shaft seal into gearbox causes high pressure in gearbox.	See your authorized dealer for repair.
No gearshift function.	Shifter pin worn or broken.	See your authorized dealer for repair.
Water leaking out of shaft seal or side hole.	Output shaft seals worn.	See your authorized dealer for repair.
	Water pressure too high. Seal damaged.	Maximum water pressure is 60 psi/4 bar.

SPECIFICATIONS

Pressure	2000 psi/140 bar
Water Pressure	Max. 60 psi/4 bar
Maximum Back Pressure	250 psi/17 bar
Weight	18.7 lbs./8.5 kg
Overall Length	19.3 in./490 mm
Maximum Fluid Temperature	140 °F/60 °C
Capacity	3.6 hp/2.8 kW
Flow Range	5–13 GPM/20–50 LPM
Maximum Flow	13 GPM/49 LPM
Porting	-8 SAE O-ring
Water Connection	Gardena System
Free Speed	1st Gear: 380 rpm
	2nd Gear: 900 rpm
	3rd Gear: 1800 rpm
Drill Bit Connection	1-1/4 in. UNC male/R 1/2 in. Female
Hydraulic Connection	Quick Couplers 1/2 in. FF
Hose Diameter	.500 in./12 mm
Sound Pressure	80 DBA @ 1m.
Vibration Level	0.82 m/s^2

ACCESSORIES

Anchor Stand	62275
7/8 in. Core Bit with Crown	41241
1 in. Core Bit with Crown	41242
1-1/4 in. Core Bit with Crown	41243
2 in. Core Bit Segmented	41244
3 in. Core Bit Segmented	41245
4 in. Core Bit Segmented	41246
6 in. Core Bit Segmented	41247
Vacuum Pump	44957
Water Tank	41240

Centering Aid Handle Assy 41252

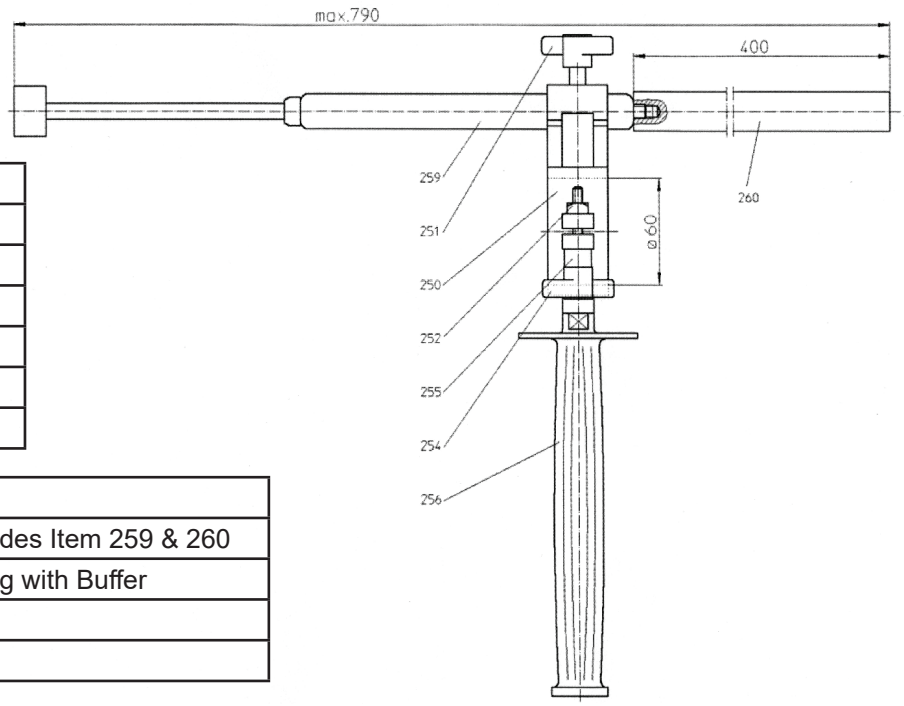

CLAMP CLIP ASSY P/N-41612
Includes Item 250 thru 256

ITEM #	PART NO.	DESCRIPTION
250	41613	Clamp Clip
251	41614	Screw, Locking
252	41616	Nut, Square
254	41621	Washer
255	41622	Distance Ring
256	41623	Handle

ITEM #	PART NO.	DESCRIPTION
	41608	Centering Aid, Includes Item 259 & 260
259	41609	Gas-pressure Spring with Buffer
260	41611	Extension Rod
	56607	Centering Aid Tip

CD10 PARTS ILLUSTRATION

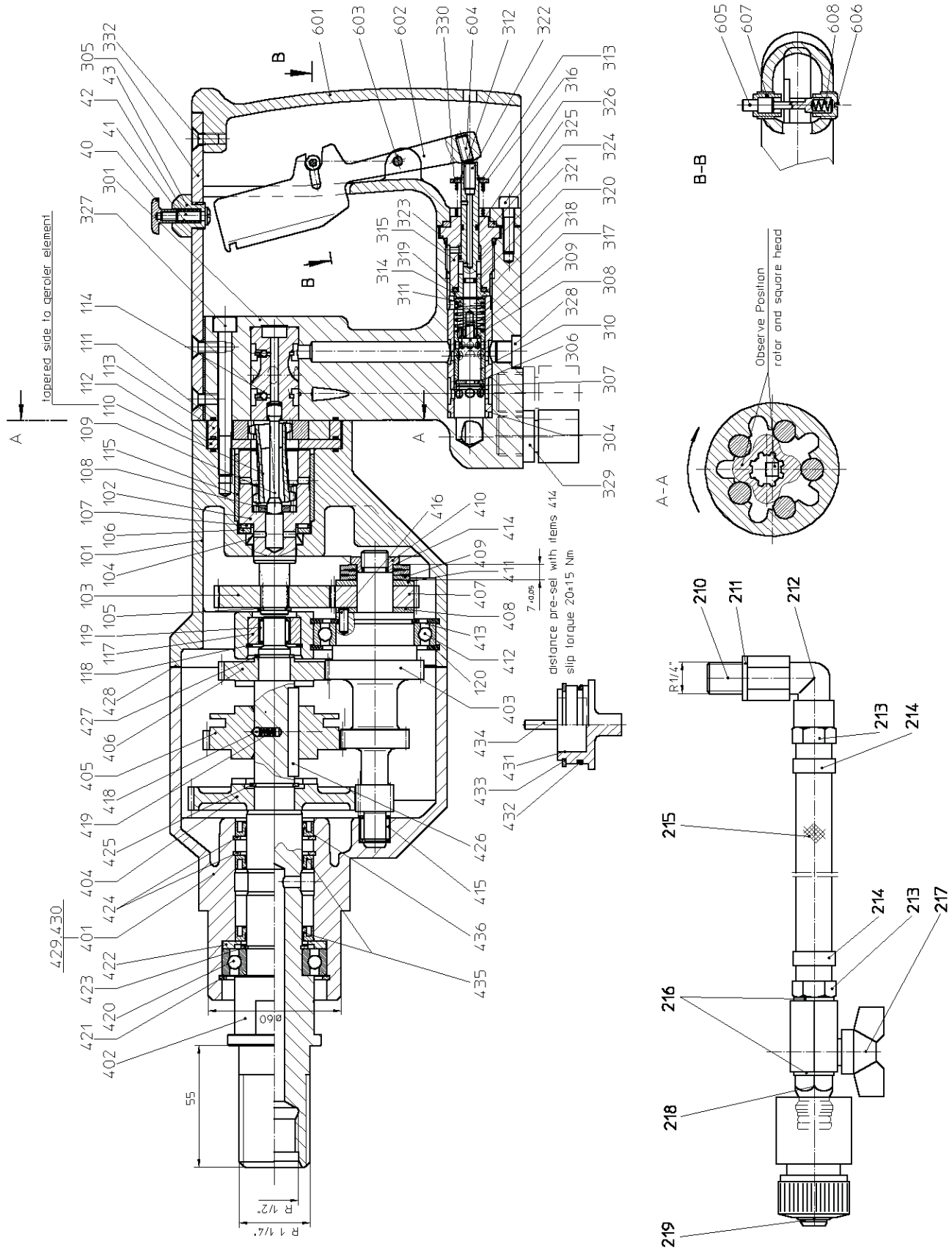

STANLEY

CD10 PARTS LIST

ITEM	P/N	QTY	DESCRIPTION
TG4	28409	1	COMPOSITE SAFETY DECAL (NOT SHOWN)
A10	40507	1	HOSE SET WITH QUICK COUPLERS (NOT SHOWN)
TG5	76482	1	CD10 NAME TAG (SEE PAGE # 6)
AY1	41249	1	MOTOR ASSEMBLY (INCLUDES ITEMS 101 - 210)
101	41253	1	MOTOR HOUSING
102	41254	1	OUTPUT SHAFT
103	41255	1	SPUR GEAR
104	41256	1	SHAFT SEALING
105	41257	1	SNAP RING
106	41258	1	THRUST WASHER
107	41259	1	THRUST BEARING
108	41260	1	SHAFT SPACER
109	41261	1	SPOOL DRIVE
110	41262	1	DRIVE
111	41263	3	O-RING *
112	41264	1	SPACER PLATE
113	41265	1	GEROLER ASSY
114	41266	1	SPOOL
115	41267	1	BEARING
117	41624	1	BEARING RING
118	41268	1	SNAP RING
119	41269	1	NEEDLE BEARING
120	41270	1	SNAP RING
AY2	41252	1	CENTERING AID HANDLE ASSY (INCLUDES ITEMS AY3 CENTERING AID & AY4 CLAMP CLIP ASSY)
AY3	41608	1	CENTERING AID (INCLUDES ITEMS 259 & 260)
259	41609	1	GAS PRESSURE SPRING W/BUFFER (INCLUDES ITEM 261)
260	41611	1	EXTENSION ROD
261	56607	1	BUFFER (INCLUDED WITH ITEM 259 GAS PRESSURE SPRING W/ BUFFER)
AY4	41612	1	CLAMP CLIP ASSY (INCLUDES ITEMS 250 - 256)
250	41613	1	CLAMP CLIP
251	41614	3	LOCKING SCREW
252	41616	3	SQUARE NUT
254	41621	2	WASHER
255	41622	4	DISTANCE RING
256	41623	1	HANDLE
AY5	41250	1	THREE-SPEED GEARBOX ASSY (INCLUDES ITEMS 401 THRU 436 & 210 - 219)
401	41271	1	BEARING HOUSING

ITEM	P/N	QTY	DESCRIPTION
402	41272	1	OUTPUT SHAFT
404	41273	1	SPUR GEAR
405	41274	1	NOTCHED WHEEL
406	41275	1	SPUR GEAR
415	41276	1	NEEDLE BEARING
418	41277	1	BALL
419	41278	1	COMPRESSION SPRING
420	41279	1	GROOVED BALL BEARING
421	41280	1	SNAP RING
422	41281	1	WASHER
423	41284	1	SNAP RING
424	41286	2	SNAP RING
425	41287	1	SNAP RING
426	41298	1	FEATHER KEY
427	41348	1	SNAP RING
AY6	41349	1	GEARSHIFT LEVER ASSY (INCLUDES ITEMS 431 - 436)
431	41361	1	GEARSHIFT LEVER *
432	41362	1	O-RING *
433	41373	1	SNAP RING
434	41375	1	DOWEL PIN
435	41376	2	RADIAL SHAFT SEALING
436	41377	1	RADIAL SHAFT SEALING
AY7	41379	1	COUNTERSHAFT ASSY (INCLUDES ITEMS 403 - 417)
403	41380	1	GEAR SHAFT
407	41381	1	SPUR GEAR
408	41382	1	WASHER
409	41383	3	BELLEVILLE BEARING
410	41384	1	NUT
411	41385	1	WASHER
412	41386	1	GROOVED BALL BEARING
413	41387	1	SNAP RING
414	41388	1	SHIM
417	41389	1	SHIM
416	41390	1	DOWEL PIN *
428	41391	1	SEAL
429	41392	4	FILLISTER-HEAD SCREW
430	52661	2	DOWEL PIN
AY8	65204	1	WATER VALVE HOSE ASSY (INCLUDES ITEMS 210 - 219
210	41587	1	CONNECTING PIECE
211	41396	1	GASKET
212	65204	1	ELBOW (PART OF ITEM AY8 WATER VALVE HOSE ASSY P/N-65204)

CD10 PARTS LIST

ITEM	P/N	QTY	DESCRIPTION
213	65204	2	HOSE CONNECTOR (PART OF ITEM AY8 WATER VALVE HOSE ASSY P/N-65204)
214	65204	2	CLAMP (PART OF ITEM AY8 WATER VALVE HOSE ASSY P/N-65204)
215	65204	1	HOSE (PART OF ITEM AY8 WATER VALVE HOSE ASSY P/N-65204)
216	41396	2	GASKET
217	65206	1	STOPCOCK
218	41586	1	CONNECTING PIECE
219	41588	1	WATER STOP GARDENA 1/2 IN.
AY9	41251	1	HANDLE ASSY (INCLUDES ITEMS 301 THRU 332, 601 - 608 & 40 - 43)
301	41590	1	VALVE HOUSING ASSY
305	41591	1	BAR
306	41593	1	GLAND
313	41062	1	SNAP RING
316	41065	1	COMPRESSION SPRING
324	41594	1	SWIVEL RING-SEGMENT
325	40957	1	FILLISTER-HEAD SCREW
327	41595	5	FILLISTER-HEAD SCREW
328	41075	1	PLUG
329	01652	2	HOSE ASSY
332	41596	4	SCREW
601	41597	1	HANDLE
602	41598	1	VALVE LEVER
603	41599	1	DOUBLE-NOTCHED PIN
604	41600	1	SCREW
605	52663	1	LOCK BOLT
606	52664	1	BUSHING
607	52665	1	BUSHING
608	52666	1	COMPRESSION SPRING
A11	03971	1	COUPLER SET (NOT SHOWN)
A12	41601	1	VALVE ASSY (INCLUDES ITEMS 307 - 330)
307	41056	1	SNAP RING
308	41057	1	FILLISTER-HEAD SCREW
309	41058	1	WASHER
310	41059	1	CONTROL PISTON
311	41060	1	SPRING SEAT
312	41061	1	PIN
314	41063	1	BUSHING
315	41064	1	GUIDE
317	41066	1	COMPRESSION SPRING
318	41067	1	SNAP SPRING
319	41068	1	O-RING
320	41069	1	O-RING

ITEM	P/N	QTY	DESCRIPTION
321	41070	1	O-RING
322	41071	1	SCREW
323	41602	1	O-RING
326	41073	1	O-RING
330	52660	1	WASHER
A13	41603	1	VALVE LEVER LOCKING ASSY (INCLUDES ITEMS 40 - 43)
40	41604	1	HOUSING
41	41605	1	LATCH PIN
42	41606	1	COMPRESSION SPRING
43	41607	1	PUSH BUTTON

SERVICE PARTS	
44969	FILTER ELEMENT
44970	GASKET
44971	MUFFLER ELEMENT
44972	STAND GASKET
45111	SEAL KIT INSTRUCTION
45110	SEAL KIT (* DENOTES PART IN SEAL KIT)

STANLEY

STANLEY®

STANLEY Infrastructure
6430 SE Lake Road
Portland, Oregon 97222 USA
(503) 659-5660 / Fax (503) 652-1780
www.stanleyinfrastructure.com